Ever-Power Industry Co.,LTD

Newland Industry Inc.
No.13-1-302 wanjiahuacheng,pingshui road,hangzhou,zhejiang,china
zip code:310030
Telephone: +86 571 87870111 Telfax: +86 571 88220651
E-mail: chinasinotech@gmail.com

PTO SHAFT & GEARBOX

08/11-1 EDITION

Brief introduction

Contents

Cardan joint theory

The PTO drive shaft for agricultural applications consists of two cardan joints and a telescopic coupling.The cardan joint, consisting of two yokes and a cross, is the element used to transmit the motion between two tilted axles. The cardan joint construction is designed so that during rotation, the speed of the output shaft is not always equal to that of the input shaft and this difference in speed depends on the articulation angle of the joint (Fig. 1). The transmission ratio versus the articulation angle and the rotation angle is represented in Fig. 2. The more the ratio deviates from 1 the greater becomes the irregularity of the motion, thus generating undesirable effects (vibrations, noise, inertial stress).

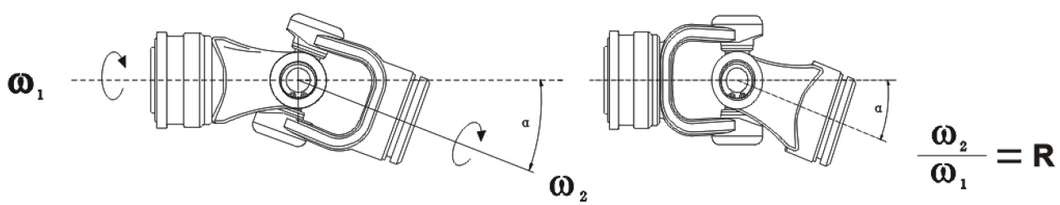

Fig.1

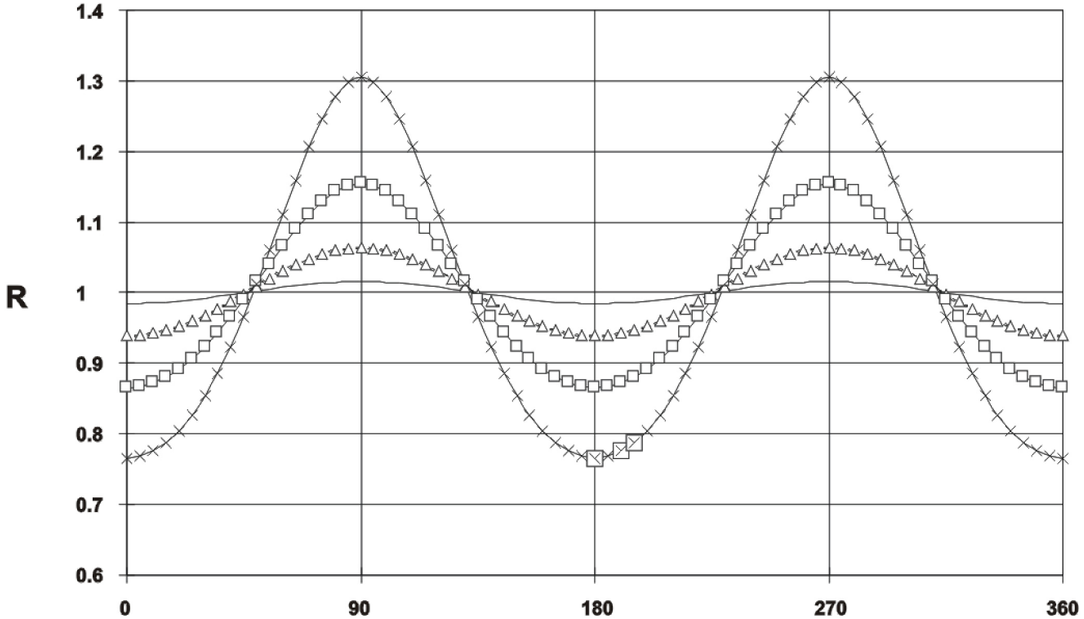

Fig.2

α =articulation angle β =rotation angle

Kinematic characteristics

The standard PTO drive shaft consists of two cardan joints. The irregularities of the single joints thus can be cancelled or mutually combined. When the articulation angles of the two joints are equal (see configuration W or Z in Fig. 3) the transmission is uniform, i.e. The speed of the output yoke is always equal to the speed of the input yoke, thus eliminating the undesirable effects. In all the other angulations (Fig. 4), an irregularity always remains that can be evaluated with the graph on the following page (Fig. 5).

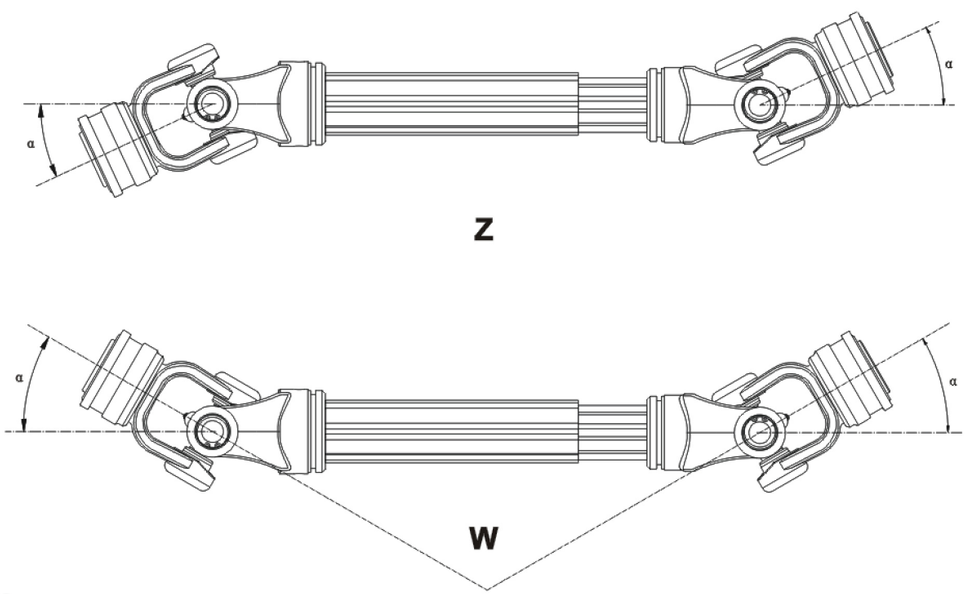

Fig.3

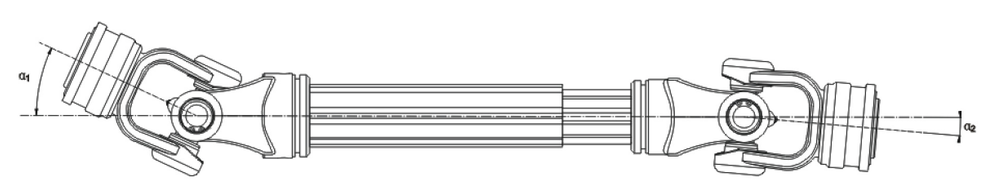

Fig.4

PTO Drive shaft rotation irregularity alignment chart

Irregularity " i" of the motion depends on the articulation of the two cardan joints and on the difference between the articulations of the two joints (see the example: with angular difference being equal, the irregularity is greater if the articulations of the single joints are greater).

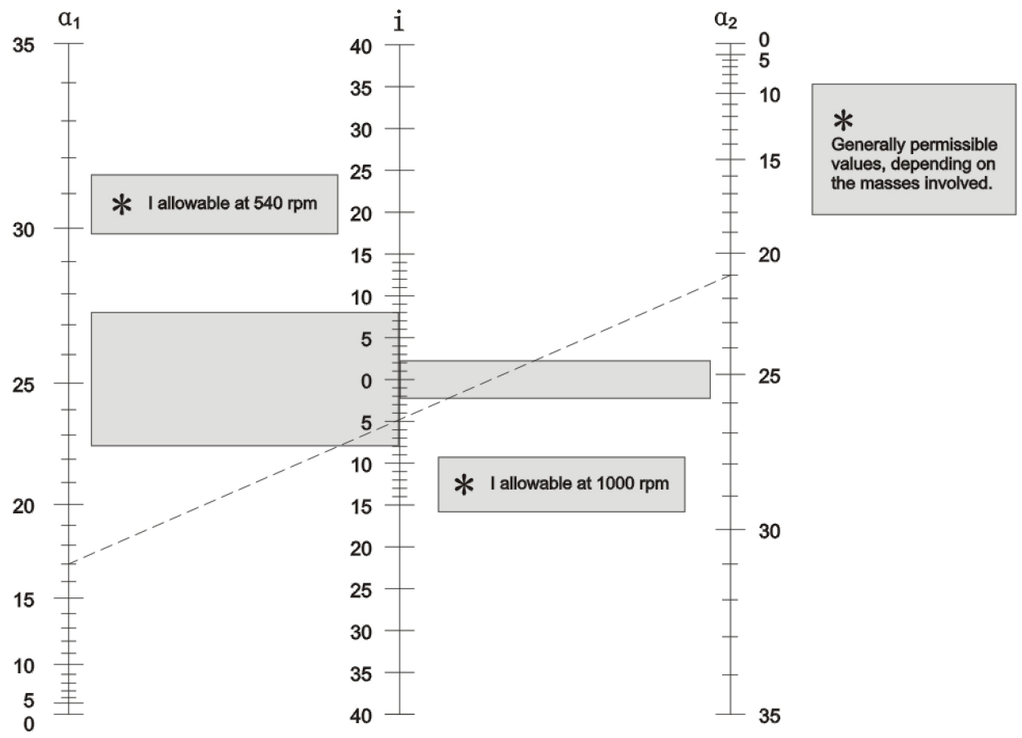

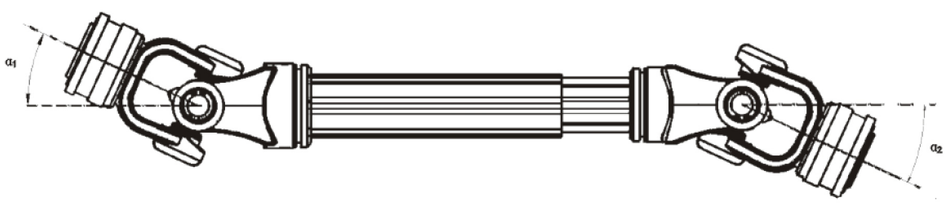

Fig.5

Example:
a1=0° , a2=4° , a1-a2=4°
i=0,5%
a1=21° , a2=25° , a1-a2=4°
i=6%

Constant velocity joint CvJ

The CvJ (Constant Velocity Joint) is a double universal joint with a centering system that equally divides the articulation angle between the two yokes (W configuration). The speed of the output yoke is always equal to the input speed and there are no rotation irregularities. In a PTO drive shaft with a CvJ joint and a standard joint (Fig. 6), the total irregularity is caused only by the standard joint, that therefore must work with small articulation angles. For high work angles at the two ends of the shaft, two CvJ joints must be used (Fig. 7). The CvJ joint can work with high articulation angles only for brief periods (ex.: while steering). Absolute quality And reliability of the CvJ construction are ensured by the ball bridge welded to the yoke which considerably reduces stress and consequently wears in the ball-cylinder contact zone and in the splined coupling between the shaft and the yoke.

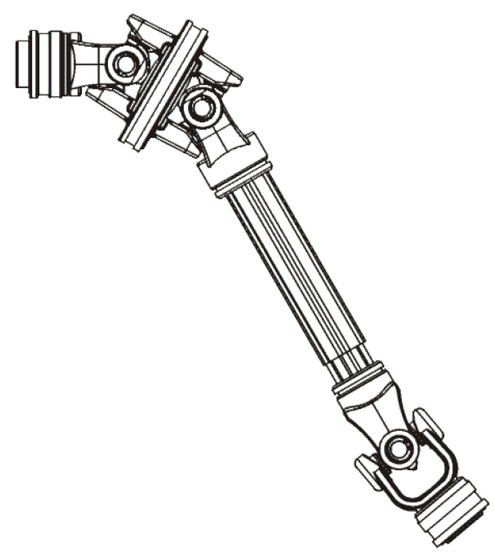

Fig.6

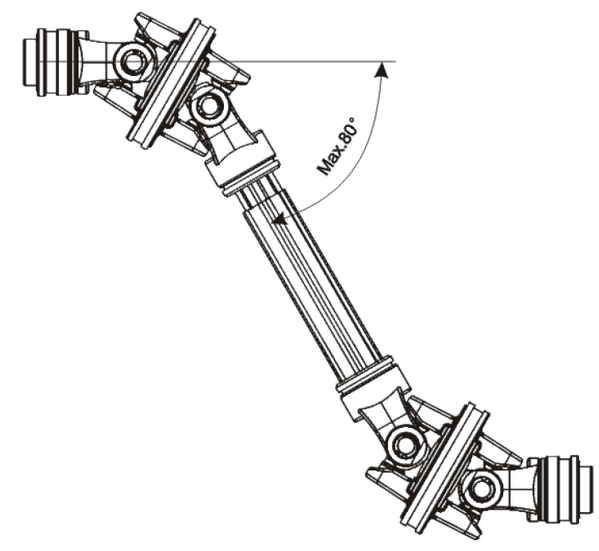

Fig.7

Series T

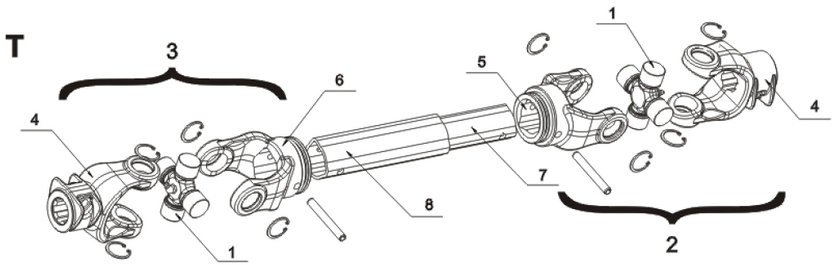

Type	U-joint	Joint simple		Splined yoke	Tube yoke		Tube	
		Inner	outer		Inner	outer	Inner	outer
		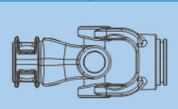			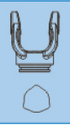	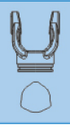		
	1	2	3	4	5	6	7	8
T10	2000110 22×54	4001001	4001002	101G110138	102T1226	103T1233	301T263	302T332
T20	2000220 23.8×61	4002001	4002002	101G220138	102T2229	103T2236	301T293	301T363
T30	2000311 27×70	4003001	4003002	101G311138	102T3236	103T3243	301T363	302T433
T40	2000421 27×74.6	4004001	4004002	101G421138	102T4236	103T4243	301T364	302T433
T50	2000500 30.22×80	4005001	4005002	101G500138	102T5245	103T5252	301T454	302T523
T60	2000600 30.22×92	4006001	4006002	101G622138	102T6245	103T6254	301T454	301T544
T70	2000700 30.22×106.3	4007001	4007002	101G723138	102T7245	103T7254	301T455	301T544
T7N	20007N 35×94	4007N001	4007N002	101G7N138	102T7N245	103T7N254	301T455	301T544
T80	2000824 34.9×103.3	4008001	4008002	101G824138	102T8245	103T8263	301T544	302T634
T90	2000900 41×108	4009001	4009002	101G900138	102T9254	103T9263	301T546	302T634

Operating torque

Type	540 tr./min			1000 tr./min			Nm
	kw	pk	Nm	kw	pk	Nm	
T10	12	16	210	18	25	172	320
T20	15	21	270	23	31	220	450
T30	22	30	390	35	47	330	640
T40	26	35	460	40	55	380	780
T50	35	47	620	54	74	520	1050
T60	47	64	830	74	100	710	1450
T70	55	75	970	87	118	830	1800
T7N	55	75	970	87	118	830	1800
T80	70	95	1240	110	150	1050	2250
T90	88	120	1560	140	190	1340	2900

Spare parts for PTO drive shaft Series T

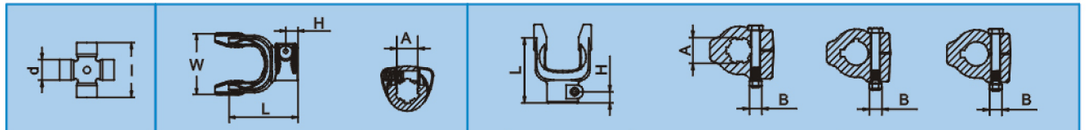

Type	d	l	W	H	L	A	code1	H	L	A	B	code2	code3	code4
T10	22	54	62	21	90	$1\frac{3}{8}$″-Z6	101G110138	14	89	$1\frac{3}{8}$″-Z6	M12	101G110538	101AE110332 $1\frac{1}{4}$″BORE $\frac{1}{4}$″+$\frac{3}{8}$″KEY	101AE110322 $\frac{7}{8}$″BORE $\frac{1}{4}$″KEY
						$1\frac{3}{8}$″-Z21	101G110121				M12		101AE110335 $1\frac{3}{8}$″BORE $\frac{1}{4}$″+$\frac{3}{8}$″KEY	101AE110325 1″BORE $\frac{1}{4}$″KEY
											M12		101AE110332 $1\frac{1}{2}$″BORE $\frac{1}{4}$″+$\frac{3}{8}$″KEY	101AE110328 $1\frac{1}{8}$″BORE $\frac{1}{4}$″KEY
T20	23.8	61	68	21	98	$1\frac{3}{8}$″-Z6	101G220138	20	98	$1\frac{3}{8}$″-Z6	M12	101G220538	101AE220332 $1\frac{1}{4}$″BORE $\frac{1}{4}$″+$\frac{3}{8}$″KEY	101AE220322 $\frac{7}{8}$″BORE $\frac{1}{4}$″KEY
						$1\frac{1}{8}$″-Z6	101G220118				M12		101AE220335 $1\frac{3}{8}$″BORE $\frac{1}{4}$″+$\frac{3}{8}$″KEY	101AE220325 1″BORE $\frac{1}{4}$″KEY
						$1\frac{3}{8}$″-Z21	101G220121				M12		101AE220332 $1\frac{1}{2}$″BORE $\frac{1}{4}$″+$\frac{3}{8}$″KEY	101AE220328 $1\frac{1}{8}$″BORE $\frac{1}{4}$″KEY
T30	27	70	77	21	102	$1\frac{3}{8}$″-Z6	101G311138	22	102	$1\frac{3}{8}$″-Z6	M12	101G311538	101AE311332 $1\frac{1}{4}$″BORE $\frac{1}{4}$″+$\frac{3}{8}$″KEY	101AE311322 $\frac{7}{8}$″BORE $\frac{1}{4}$″KEY
						$1\frac{3}{8}$″-Z21	101G311121				M12		101AE311335 $1\frac{3}{8}$″BORE $\frac{1}{4}$″+$\frac{3}{8}$″KEY	101AE311325 1″BORE $\frac{1}{4}$″KEY
											M12		101AE311332 $1\frac{1}{2}$″BORE $\frac{1}{4}$″+$\frac{3}{8}$″KEY	101AE311328 $1\frac{1}{8}$″BORE $\frac{1}{4}$″KEY
T40	27	74.6	83	21	109	$1\frac{3}{8}$″-Z6	101G421138	20	107	$1\frac{3}{8}$″-Z6	M12	101G421538	101AE421332 $1\frac{1}{4}$″BORE $\frac{1}{4}$″+$\frac{3}{8}$″KEY	101AE421322 $\frac{7}{8}$″BORE $\frac{1}{4}$″KEY
						$1\frac{1}{8}$″-Z6	101G421118				M12		101AE421335 $1\frac{3}{8}$″BORE $\frac{1}{4}$″+$\frac{3}{8}$″KEY	101AE421325 1″BORE $\frac{1}{4}$″KEY
						$1\frac{3}{8}$″-Z21	101G421121				M12		101AE421332 $1\frac{1}{2}$″BORE $\frac{1}{4}$″+$\frac{3}{8}$″KEY	101AE421328 $1\frac{1}{8}$″BORE $\frac{1}{4}$″KEY
T50	30.22	80	95	21	113	$1\frac{3}{8}$″-Z6	101G500138			$1\frac{3}{8}$″-Z6	M12	101G500538	101AE500332 $1\frac{1}{4}$″BORE $\frac{1}{4}$″+$\frac{3}{8}$″KEY	101AE500322 $\frac{7}{8}$″BORE $\frac{1}{4}$″KEY
						$1\frac{3}{8}$″-Z21	101G500121				M12		101AE500335 $1\frac{3}{8}$″BORE $\frac{1}{4}$″+$\frac{3}{8}$″KEY	101AE500325 1″BORE $\frac{1}{4}$″KEY
											M12		101AE500332 $1\frac{1}{2}$″BORE $\frac{1}{4}$″+$\frac{3}{8}$″KEY	101AE500328 $1\frac{1}{8}$″BORE $\frac{1}{4}$″KEY
T60	30.22	92	101	21	119	$1\frac{3}{8}$″-Z6	101G622138	20	118	$1\frac{3}{8}$″-Z6	M12	101G622538	101AE622332 $1\frac{1}{4}$″BORE $\frac{1}{4}$″+$\frac{3}{8}$″KEY	101AE622322 $\frac{7}{8}$″BORE $\frac{1}{4}$″KEY
						$1\frac{3}{8}$″-Z21	101G622121				M12		101AE622335 $1\frac{3}{8}$″BORE $\frac{1}{4}$″+$\frac{3}{8}$″KEY	101AE622325 1″BORE $\frac{1}{4}$″KEY
											M12		101AE622338 $1\frac{1}{2}$″BORE $\frac{1}{4}$″+$\frac{3}{8}$″KEY	101AE622328 $1\frac{1}{8}$″BORE $\frac{1}{4}$″KEY

Spare parts for PTO drive shaft Series T

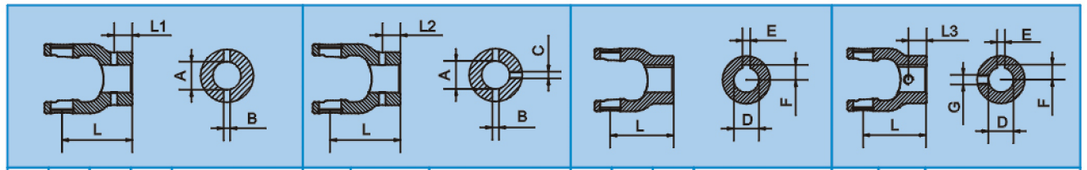

L	L1	A	B	code5	L2	C	code6	D	E	F	code7	L3	G	code8
80	20	20	6	106AE110020	15	M6	106AE110020S	20	6	12.8	106KW110020	20	M6	106KW110020S
		22	8	106AE110022			106AE110022S	22		13.8	106KW110022			106KW110022S
		25		106AE110025			106AE110025S	25	8	15.8	106KW110025		M8	106KW110025S
		30	10	106AE110030			106AE110030S	30		18.3	106KW110030			106KW110030S
		31.8		106AE110318	18.5		106AE110318S							
84	20	20	6	106AE220020	15	M6	106AE220020S	20	6	12.8	106KW220020	20	M6	106KW220020S
		22	8	106AE220022			106AE220022S	22		13.8	106KW220022			106KW220022S
		25		106AE220025			106AE220025S	25	8	15.8	106KW220025		M8	106KW220025S
		30	10	106AE220030			106AE220030S	30	-	18.3	-			106KW220030S
92	20	22	8	106AE311022	15	M6	106AE311022S	22	6	13.8	106KW311022	15	M6	106KW311022S
		25		106AE311025	20		106AE311025S	25	8	15.8	106KW311025	20	M8	106KW311025S
		30	10	106AE311030			106AE311030S	30		18.3	106KW311030			106KW311030S
		35	13	106AE311035			106AE311035S	35	10	20.8	106KW311035		M10	106KW311035S
92	20	22	8	106AE421022	20	M6	106AE421022S	22	6	13.8	106KW421022	20	M6	106KW421022S
		25		106AE421025			106AE421025S	25	8	15.8	106KW421025		M8	106KW421025S
		30	10	106AE421030			106AE421030S	30		18.3	106KW421030			106KW421030S
	25	31.8		106AE421318			106AE421318S	35	10	20.8	106KW421035		M10	106KW421318S
		35	13	106AE421035	15	M8	106AE421035S							
98	20	30	10	106AE500030	20	M6	106AE500030S	30	8	18.3	106KW500030	20	M8	106KW500030S
		35	13	106AE500035		M8	106AE500035S	35	10	20.8	106KW500035		M10	106KW500035S
		40		106AE500040		M10	106AE500040S	40	12	23.3	106KW500040		M12	106KW500040S
106	20	30	10	106AE622030	20	M6	106AE622030S	30	8	18.3	106KW622030	20	M8	106KW622030S
		35	13	106AE622035		M8	106AE622035S	35	10	20.8	106KW622035		M10	106KW622035S
		40		106AE622040		M10	106AE622040S	40	12	23.3	106KW622040		M12	106KW622040S
		42		106AE622042			106AE622042S	42		24.3	106KW622042			106KW622042S

Spare parts for PTO drive shaft Series T

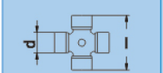

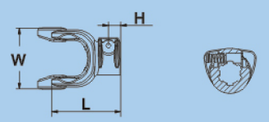

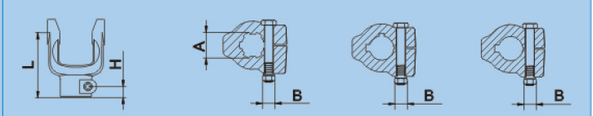

Type	d	l	W	H	L	A	code1	H	L	A	B	code1	code2	code3
T70	30.22	106.3	125	21	122	$1\frac{3}{8}''$-Z6	101G723138	19	122	$1\frac{3}{8}''$-Z6	M12	101G723538	101AE723335 $1\frac{3}{8}''$BORE $\frac{1}{4}''+\frac{3}{8}''$KEY	
						$1\frac{3}{8}''$-Z21	101G723121				M12		101AE723338 $1\frac{1}{2}''$BORE $\frac{1}{4}''+\frac{3}{8}''$KEY	
T7N	35	94	105	21	122	$1\frac{3}{8}''$-Z6	101G7N138	19	122	$1\frac{3}{8}''$-Z6	M12	101G7N538	101AE7N335 $1\frac{3}{8}''$BORE $\frac{1}{4}''+\frac{3}{8}''$KEY	
						$1\frac{3}{8}''$-Z21	101G7N121				M12		101AE7N338 $1\frac{1}{2}''$BORE $\frac{1}{4}''+\frac{3}{8}''$KEY	
T80	34.9	106.3	125	21	128	$1\frac{3}{8}''$-Z6	101G824138	21	124	$1\frac{3}{4}''$-Z20	M16	101G824520	101AE824335 $1\frac{3}{8}''$BORE $\frac{1}{4}''+\frac{3}{8}''$KEY	
						$1\frac{3}{8}''$-Z21	101G824121				M16		101AE824338 $1\frac{1}{2}''$BORE $\frac{1}{4}''+\frac{3}{8}''$KEY	
T90	41	108	130	21	128	$1\frac{3}{8}''$-Z6	101G900138							
						$1\frac{3}{8}''$-Z21	101G900121							

Spare parts for PTO drive shaft Series T

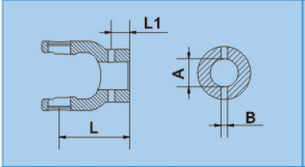

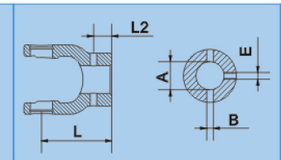

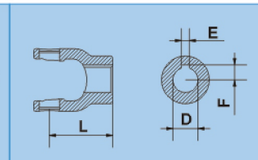

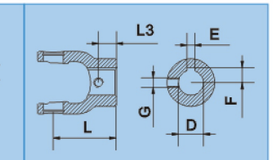

L	L1	A	B	code5	L2	E	code6	D	E	F	code7	L3	G	code8
117	25	35	13	106AE723035	25	M8	106AE723035S	35	10	20.8	106KW723035	25	M10	106KW723035S
		40		106AE723040		M10	106AE723040S	40	12	23.3	106KW723040		M12	106KW723040S
		42		106AE723042			106AE723042S	42		24.3	106KW723042			106KW723042S
		45		106AE723045			106AE723045S	45	14	26.3	106KW723045		M14	106KW723045S
106	20	30	10	106AE7N030	20	M6	106AE7N030S	30	8	18.3	106KW7N030	20	M8	106KW7N030S
		35	13	106AE7N035		M8	106AE7N035S	35	10	20.8	106KW7N035		M10	106KW7N035S
		40		106AE7N040		M10	106AE7N040S	40	12	23.3	106KW7N040		M12	106KW7N040S
		42		106AE7N042			106AE7N042S	42		24.3	106KW7N042			106KW7N042S
		45		106AE7N045			106AE7N045S	45	14	26.3	106KW7N045		M14	106KW7N045S
127	25	35	13	106AE824035	25	M8	106AE824035S	35	8	20.8	106KW824035	25	M10	106KW824035S
		40		106AE824040		M10	106AE824040S	40	10	23.3	106KW824040		M12	106KW824040S
		42		106AE824042			106AE824042S	42	12	24.3	106KW824042			106KW824042S
		45		106AE824045			106AE824045S	45		26.3	106KW824045		M14	106KW824045S
135	30	45		106AE900045										

Series W

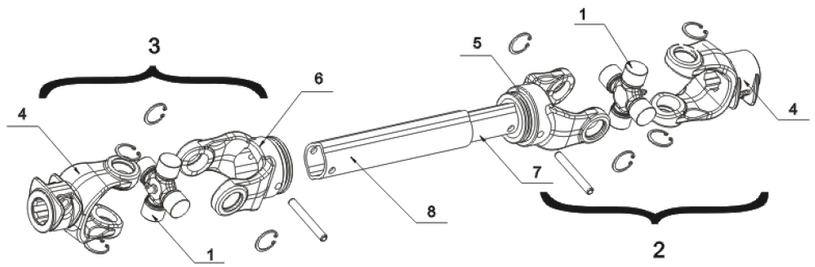

Type	U-joint	Joint simple		Splined yoke	Tube yoke		Tube	
		Inner	outer		Inner	outer	Inner	outer
		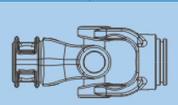			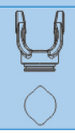	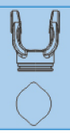		
	1	2	3	4	5	6	7	8
W100 2100	2000010 22×55	40010001	40010002	101G010138	102W10223	103W10230	301L235	302L303
W200 2200	2000220 23.8×61.3	40020001	40020002	101G220138	102W20234	103W20241	301L344	302L413
W1	2000311 27×70	40011001	40011002	101G311138	102W11234	103W11241	301L344	302L413
W210 2300	2000421 27×74.6	40021001	40021002	101G421138	102W21234	103W21241	301L344	302L413
W2300S	2000421 27×74.6	-	-	101G421138	102W21239	103W21248	301L395	302L484
W220	2000622 30.18×92	40022001	40022002	101G622138	102W22239	103W22248	301L395	302L484
W2400 (035)	2000036 32×76	-	-	101G035138	102W35239	103W35248	301L395	302L484

Operating torque							
Type	540 tr./min			1000 tr./min			Nm
	kw	pk	Nm	kw	pk	Nm	
		cv			cv		
W100 2100	12	16	210	18	24	175	1100
W200 2200	20	27	335	31	42	295	1750
W1	22	30	390	35	47	330	1950
W210 2300	28	38	500	44	60	415	2350
W2300S	32	43	575	52	71	450	2800
W220	35	49	600	58	78	525	3200
W2400 (035)	39	53	695	61	83	580	3800

Spare parts for PTO drive shaft Series W

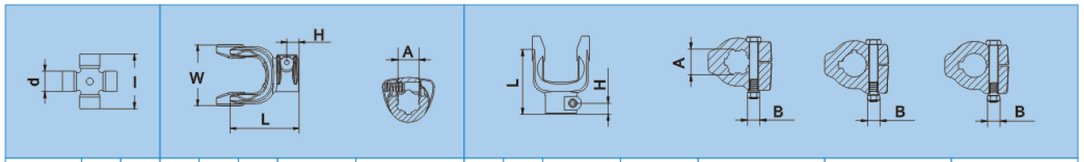

Type	d	l	W	H	L	A	code1	H	L	A	B	Code2	Code3	Code4
W100	22	55	62	21	90	$1\frac{3}{8}$″-Z6	101G010138	14	89	$1\frac{3}{8}$″-Z6	M12	101G110538	101AE110332 $1\frac{1}{4}$″BORE $\frac{1}{4}$″+$\frac{3}{8}$″KEY	101AE110322 $\frac{7}{8}$″BORE $\frac{1}{4}$″KEY
						$1\frac{3}{8}$″-Z21	101G010121				M12		101AE110335 $1\frac{3}{8}$″BORE $\frac{1}{4}$″+$\frac{3}{8}$″KEY	101AE110325 1″BORE $\frac{1}{4}$″KEY
											M12		101AE110332 $1\frac{1}{2}$″BORE $\frac{1}{4}$″+$\frac{3}{8}$″KEY	101AE110328 $1\frac{1}{8}$″BORE $\frac{1}{4}$″KEY
W200	23.8	61	68	21	98	$1\frac{3}{8}$″-Z6	101G220138	20	98	$1\frac{3}{8}$″-Z6	M12	101G220538	101AE220332 $1\frac{1}{4}$″BORE $\frac{1}{4}$″+$\frac{3}{8}$″KEY	101AE220322 $\frac{7}{8}$″BORE $\frac{1}{4}$″KEY
						$1\frac{1}{8}$″-Z6	101G220118				M12		101AE220335 $1\frac{3}{8}$″BORE $\frac{1}{4}$″+$\frac{3}{8}$″KEY	101AE220325 1″BORE $\frac{1}{4}$″KEY
						$1\frac{3}{8}$″-Z21	101G220121				M12		101AE220332 $1\frac{1}{2}$″BORE $\frac{1}{4}$″+$\frac{3}{8}$″KEY	101AE220328 $1\frac{1}{8}$″BORE $\frac{1}{4}$″KEY
W1	27	70	77	21	102	$1\frac{3}{8}$″-Z6	101G311138	22	102	$1\frac{3}{8}$″-Z6	M12	101G311538	101AE311332 $1\frac{1}{4}$″BORE $\frac{1}{4}$″+$\frac{3}{8}$″KEY	101AE311322 $\frac{7}{8}$″BORE $\frac{1}{4}$″KEY
						$1\frac{3}{8}$″-Z21	101G311121				M12		101AE311335 $1\frac{3}{8}$″BORE $\frac{1}{4}$″+$\frac{3}{8}$″KEY	101AE311325 1″BORE $\frac{1}{4}$″KEY
											M12		101AE311332 $1\frac{1}{2}$″BORE $\frac{1}{4}$″+$\frac{3}{8}$″KEY	101AE311328 $1\frac{1}{8}$″BORE $\frac{1}{4}$″KEY
W210	27	74.6	83	21	109	$1\frac{3}{8}$″-Z6	101G421138	20	107	$1\frac{3}{8}$″-Z6	M12	101421538	101AE421332 $1\frac{1}{4}$″BORE $\frac{1}{4}$″+$\frac{3}{8}$″KEY	101AE421322 $\frac{7}{8}$″BORE $\frac{1}{4}$″KEY
						$1\frac{1}{8}$″-Z6	101G421118				M12		101AE421335 $1\frac{3}{8}$″BORE $\frac{1}{4}$″+$\frac{3}{8}$″KEY	101AE421325 1″BORE $\frac{1}{4}$″KEY
						$1\frac{3}{8}$″-Z21	101G421121				M12		101AE421332 $1\frac{1}{2}$″BORE $\frac{1}{4}$″+$\frac{3}{8}$″KEY	101AE421328 $1\frac{1}{8}$″BORE $\frac{1}{4}$″KEY
W2300S	27	74.6	83	21	109	$1\frac{3}{8}$″-Z6	101G421138	20	107	$1\frac{3}{8}$″-Z6	M12	101421538	101AE421332 $1\frac{1}{4}$″BORE $\frac{1}{4}$″+$\frac{3}{8}$″KEY	101AE421322 $\frac{7}{8}$″BORE $\frac{1}{4}$″KEY
						$1\frac{1}{8}$″-Z6	101G421118				M12		101AE421335 $1\frac{3}{8}$″BORE $\frac{1}{4}$″+$\frac{3}{8}$″KEY	101AE421325 1″BORE $\frac{1}{4}$″KEY
						$1\frac{3}{8}$″-Z21	101G421121				M12		101AE421332 $1\frac{1}{2}$″BORE $\frac{1}{4}$″+$\frac{3}{8}$″KEY	101AE421328 $1\frac{1}{8}$″BORE $\frac{1}{4}$″KEY

Spare parts for PTO drive shaft Series W

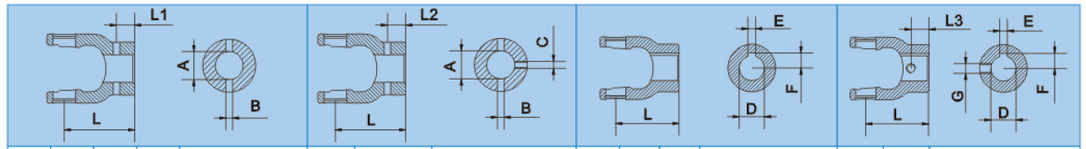

L	L1	A	B	code5	L2	C	code6	D	E	F	code7	L3	G	code8
80	20	20	6	106AE010020	15	M6	106AE010020S	20	6	12.8	106KW010020	20	M6	106KW010020S
		22	8	106AE010022			106AE010022S	22		13.8	106KW010022			106KW010022S
		25		106AE010025			106AE010025S	25	8	15.8	106KW010025		M8	106KW010025S
		30	10	106AE010030			106AE010030S	30		18.3	106KW010030			106KW010030S
		31.8		106AE010318	18.5		106AE010318S							
84	20	20	6	106AE220020	15	M6	106AE220020S	20	6	12.8	106KW220020	20	M6	106KW220020S
		22	8	106AE220022			106AE220022S	22		13.8	106KW220022			106KW220022S
		25		106AE220025			106AE220025S	25	8	15.8	106KW220025		M8	106KW220025S
		30	10	106AE220030			106AE220030S	30	-	-	-			
92	20	22	8	106AE311022	15	M6	106AE311022S	22	6	13.8	106KW311022	15	M6	106KW311022S
		25		106AE311025	20		106AE311025S	25	8	15.8	106KW311025	20	M8	106KW311025S
		30	10	106AE311030			106AE311030S	30		18.3	106KW311030			106KW311030S
		35	13	106AE311035			106AE311035S	35	10	20.8	106KW311035		M10	106KW311035S
92	20	22	8	106AE421022	20	M6	106AE421022S	22	6	13.8	106KW421022	20	M6	106KW421022S
		25		106AE421025			106AE421025S	25	8	15.8	106KW421025		M8	106KW421025S
		30	10	106AE421030			106AE421030S	30		18.3	106KW421030			106KW421030S
	25	31.8		106AE421318			106AE421318S	35	10	20.8	106KW421035		M10	106KW421035S
		35	13	106AE421035	15	M8	106AE421035S							
98	20	30	10	106AE500030	20	M6	106AE500030S	30	8	18.3	106KW500030	20	M8	106KW500030S
		35	13	106AE500035		M8	106AE500035S	35	10	20.8	106KW500035		M10	106KW500035S
		40		106AE500040		M10	106AE500040S	40	12	23.3	106KW500040		M12	106KW500040S

Spare parts for PTO drive shaft Series W

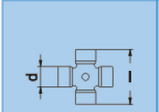

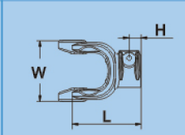

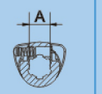

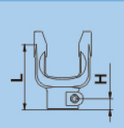

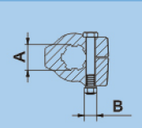

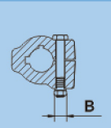

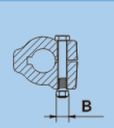

Type	d	I	W	H	L	A	code1	H	L	A	B	Code2	Code3	Code4
W220	30.18	92	101	21	119	$1\frac{3}{8}$″-Z6	101G622138	22	120	$1\frac{3}{8}$″-Z6	M12	101G622538	101AE622332 $1\frac{1}{4}$″BORE $\frac{1}{4}$″+$\frac{3}{8}$″KEY	101AE622328 $1\frac{1}{8}$″BORE $\frac{1}{4}$″KEY
						$1\frac{3}{8}$″-Z21	101G622121						101AE622335 $1\frac{3}{8}$″BORE $\frac{1}{4}$″+$\frac{3}{8}$″KEY	
						$1\frac{3}{4}$″-Z20	101G622120						101AE622338 $1\frac{1}{2}$″BORE $\frac{1}{4}$″+$\frac{3}{8}$″KEY	
						$1\frac{3}{4}$″-Z6	101G622134							
W2400 (035)	32	76	86	24	116	$1\frac{3}{8}$″-Z6	101G035138	24	116	$1\frac{3}{8}$″-Z6	M12	101G035538	101AE035332 $1\frac{1}{4}$″BORE $\frac{1}{4}$″+$\frac{3}{8}$″KEY	
						$1\frac{3}{8}$″-Z21	101G035121						101AE035335 $1\frac{3}{8}$″BORE $\frac{1}{4}$″+$\frac{3}{8}$″KEY	
													101AE035338 $1\frac{1}{2}$″BORE $\frac{1}{4}$″+$\frac{3}{8}$″KEY	

Spare parts for PTO drive shaft Series W

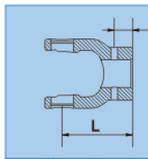

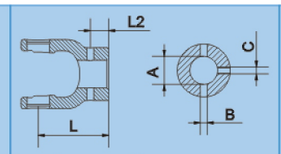

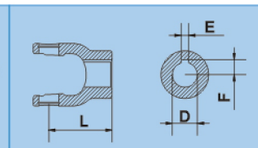

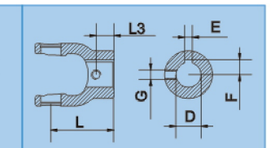

L	L1	A	B	code5	L2	C	code6	D	E	F	code7	L3	G	code8
106	20	30	10	106AE622030	20	M6	106AE622030S	30	8	18.3	106KW622030	20	M8	106KW622030S
		35	13	106AE622035		M8	106AE622035S	35	10	20.8	106KW622035		M10	106KW622035S
		40		106AE622040		M10	106AE622040S	40	12	23.3	106KW622040		M12	106KW622040S
		42		106AE622042			106AE622042S	42		24.3	106KW622042			106KW622042S

PTO drive shaft Series S

Series W

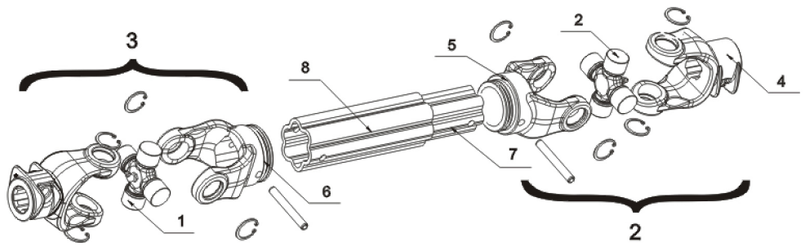

Type	U-joint	Joint simple		Splined yoke	Tube yoke		Tube	
		Inner	outer		Inner	outer	Inner	outer
	1	2	3	4	5	6	7	8
S230	2000723 30.18×106.3	40023001	40023002	101G723138	102S23251	103S23261	301S510	301S614
S240	2000824 34.9×106.3	40024001	40024002	101G824138	102S24251	103S24261	301S510	301S614
S2500 (036)	2000036 36×89	40036001	40036002	101G036138	102S036251	103S036261	301S510	301S614
S2600 (026)	2000026 42×104	40026001	40026002	101G026138	102S026261	103S026271	301S614	302S715

Operating torque

Type	540 tr./min			1000 tr./min			Nm
	kw	pk	Nm	kw	pk	Nm	
	cv			cv			
S230	36	56	780	75	92	550	3400
S240	45	77	890	82	110	780	4200
S2500	66	90	1175	102	139	975	6000
S2600	79	107	1400	122	166	1165	7800

PTO drive shaft Series G

Series T

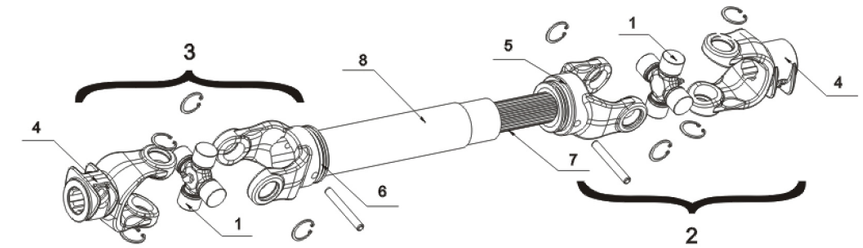

Type	U-joint	Joint simple		Splined yoke	Tube yoke		Tube	
		Inner	outer		Inner	outer	Inner	outer
	1	2	3	4	5	6	7	8
G50	2000500 30.22×80	4005001	4005002	101500138	102G35012	312G35Z12 …	301G35Z12 …	300C553
G60	2000600 30.22×92	4006001	4006002	101622138	102G35012	312G35Z12 …	301G35Z12 …	300C553
G70	20007N 35×94	4007001	4007002	1017N138	102G35012	312G40Z14 …	301G40Z14 …	300C613
G80	2000824 34.9×106.3	4008001	4008002	101824138	102G35012	312G45Z16 …	301G45Z16 …	300C613
G90	2000900 41×108	4009001	4009002	101900138	102G35012	312G45Z16 …	301G45Z16 …	300C695

Operating torque

Type	540 tr./min			1000 tr./min			Nm
	kw	pk	Nm	kw	pk	Nm	
	cv			cv			
G05	35	47	620	54	74	520	1050
G06	47	64	830	74	100	710	1450
G07	55	75	970	87	118	830	1800
G08	70	95	1240	110	150	1050	2250
G09	88	120	1560	140	190	1340	2900

Shear bolt torque limiter Series SB

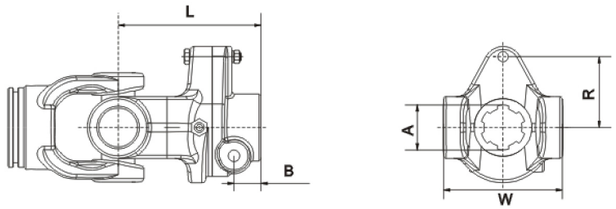

Series W-S	Series T-G	⊞	W	L	B	A	R	DIN 931 CL.8.8	Torque Nm	Type	Code
W200		23.8×61	68	99	19	13/8″-Z6	42	M6	780	SBW220138426	500W220138426
								M8	1400	SBW220138428	500W220138428
						13/8″-Z21				SBW220121428	500W220121428
W210 W2300S		27×74.6	83	107	19	13/8″-Z6	48	M8	1600	SBW421138488	500W421138488
							52		1730	SBW421138528	500W421138528
							56		1860	SBW421138568	500W421138568
						13/8″-Z21				SBW421121568	500W421121568
W2400 (035)		32×76	86	131	19	13/8″-Z6	48	M8	1600	SBW035138488	500W035138488
								M10	2500	SBW035138481	500W035138481
							56	M8	1860	SBW035138568	500W035138568
								M10	2920	SBW035138561	500W035138561
							64	M8	2130	SBW035138648	500W035138648
						13/8″-Z21	56	M10	2920	SBW035121561	500W035121561
						13/4″-Z6	48		2500	SBW035134481	500W035134481
S2500 (036)		36×89	100	141	24	13/8″-Z6	48	M10	2500	SBW036138481	500W036138481
							56		2920	SBW036138561	500W036138561
							64	M8	2130	SBW036138648	500W036138648
						13/8″-Z21	48	M10	2500	SBW036121481	500W036121481
						13/4″-Z6	56		2920	SBW036134561	500W036134561
							64		3330	SBW036134641	500W036134641
S2600 (026)		42×104	115	145	24	13/8″-Z6	56	M12	4200	SBW026138561.2	500W026138561.2
						13/8″-Z21				SBW026121561.2	500W026121561.2
						13/4″-Z6	64		4800	SBW026134641.2	500W026134641.2
						13/4 ″-Z20				SBW026120641.2	500W026120641.2
	T10	22×54	62	95	19	13/8″-Z6	35	M6	650	SB110138	500110138
						13/8″-Z21				SB110121	500110121
	T20	23.8×61	68	99	19	13/8″-Z6	48	M6	900	SB220138	500220138
						13/8″-Z21				SB220121	500220121
	T30	27×70	77	102	19	13/8″-Z6	40	M8	1300	SB311138	500311138
						13/8″-Z21				SB311121	500311121
	T40	27×74.6	83	107	19	13/8″-Z6	55	M8	1700	SB421138	500421138
						13/8″-Z21				SB421121	500421121
	T50-G50	30.22×80	95	111	21	13/8″-Z6	46	M10	2100	SB500138	500500138
						13/8″-Z21				SB500121	500500121
						13/4″-Z6				SB500134	500500134
	T60-G60	30.22×92	101	137	22	13/8″-Z6	55	M12	2500	SB622138D	500622138D
						13/8″-Z21				SB622121D	500622121D
						13/4″-Z6				SB622134D	500622134D
						13/4″-Z20				SB622120D	500622120D
	T7N-G70	35×94	105	143	22	13/8″-Z6	49	M12	3000	SB7N138D	5007N138D
						13/8″-Z21				SB7N121D	5007N121D
						13/4″-Z6				SB7N134D	5007N134D
						13/4″-Z20				SB7N120D	5007N120D
	T80-G80	34.9×106.3	125	148	20	13/8″-Z6	57	M12	3500	SB824138D	500824138D
						13/8″-Z21				SB824121D	500824121D
						13/4″-Z6				SB824134D	500824134D
						13/4″-Z20				SB824120D	500824120D

NOTE: available on demand with interfering clamp bolt
The torque limiter interrupts the power transmission when the torque exceeds the setting value, by shearing the bolt. Transmission is restored by inserting a new bolt in the device.

Shear bolt torque limiter Series SB

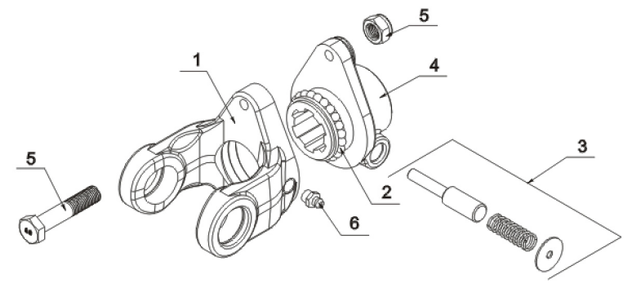

1	Yoke (type 10)	
	Yoke (type 20)	
	Yoke (type 30)	
	Yoke (type 40)	
	Yoke (type 50)	
	Yoke (type 60)	
	Yoke (type 7N)	
	Yoke (type 80)	
2	Ball 7/32″(type 10-30)	
	Ball 1/4″(type 10-30)	
	Ball 5/16″(type 60-80)	
3*	Push-pin set 1 3/8″	
	Push-pin set 1 3/4″	
4	Hub1 3/8″-Z6 (type 10)	
	Hub1 3/8″-Z21 (type 10)	
	Hub1 3/8″-Z6 (type 20)	
	Hub1 3/8″-Z21 (type 20)	
	Hub1 3/8″-Z6 (type 30)	
	Hub1 3/8″-Z21 (type 30)	
	Hub1 3/8″-Z6 (type 40)	
	Hub1 3/8″-Z21 (type 40)	
	- -	

4	Hub1 3/8″-Z6 (type 50)	
	Hub1 3/8″-Z21 (type 50)	
	Hub1 3/4″-Z6 (type 50)	
	Hub1 3/8″-Z21 (type 60)	
	Hub1 3/8″-Z6 (type 60)	
	Hub1 3/4″-Z6 (type 60)	
	Hub1 3/4″-Z20 (type 60)	
	Hub1 3/8″-Z21 (type 7N)	
	Hub1 3/8″-Z6 (type 7N)	
	Hub1 3/4″-Z6 (type 7N)	
	Hub1 3/4″-Z20 (type 7N)	
	Hub1 3/8″-Z21 (type 80)	
	Hub1 3/8″-Z6 (type 80)	
	Hub1 3/4″-Z6 (type 80)	
	Hub1 3/4″-Z20 (type 80)	
5	Bolt M6×45 + nut 8.8	
	Bolt M6×40 + nut 8.8	
	Bolt M8×50 + nut 8.8	
	Bolt M10×55 + nut 8.8	
	Bolt M10×60 + nut 8.8	
	Bolt M12×65 + nut 8.8	
6	Greaser M8×1 (type 10-50) Greaser M10×1 (type 60-80)	

*: Quantity in the Safety Device
Please contact S&J Technical Dept. for the exact number of push-pin sets to be ordered

Ratchet torque limiter Series SA

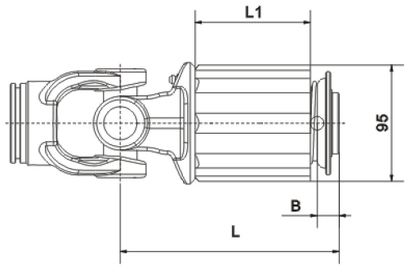

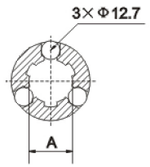

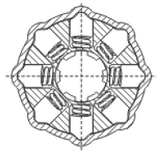

Series W-S	Series T-G		Limit.	Range	torque Nm	L1	L	B	A	Type*	Code
W100		22×55	S1	1	300	38	119			SAW010---S1	600W010---S1
			S2	2	600	57	138			SAW010---S2	600W010---S2
W200		23.8×61	S1	1	300	38	119			SAW220---S1	600W220---S1
			S2	2	600	57	138			SAW220---S2	600W220---S2
			S3	3	900	76	157			SAW220---S3	600W220---S3
W210 W2300S		27×74.6	S2	2	600	57	142			SAW421---S2	600W421---S2
			S3	3	900	76	161			SAW421---S3	600W421---S3
			S4	4	1200	95	180			SAW421---S4	600W421---S4
W2400 (035)		32×76	S3	3	900	76	165			SAW035---S3	600W035---S3
			S4	4	1200	95	184			SAW035---S4	600W035---S4
			S5	5	1500	114	203			SAW035---S5	600W035---S5
W2500 (036)		36×89	S3	3	900	76	171			SAW036---S3	600W036---S3
			S4	4	1200	95	190			SAW036---S4	600W036---S4
			S5	5	1500	114	209			SAW036---S5	600W036---S5
	T10	22×54	S1	1	300	38	112	20	13/8″-Z6 13/8″-Z21	SA110---S1	600110---S1
			S2	2	600	57	141			SA110---S2	600110---S2
	T20	23.8×61	S1	1	300	38	112			SA220---S1	600220---S1
			S2	2	600	57	141			SA220---S2	600220---S2
			S3	3	900	76	171			SA220---S3	600220---S3
	T30	27×70	S2	2	600	57	141			SA311---S2	600311---S2
			S3	3	900	76	171			SA311---S3	600311---S3
	T40	27×74.6	S2	2	600	57	141			SA421---S2	600421---S2
			S3	3	900	76	171			SA421---S3	600421---S3
			S4	4	1200	95	190			SA421---S4	600421---S4
	T50	30.22×80	S3	3	900	76	209			SA500---S3	600500---S3
			S4	4	1200	95	190			SA500---S4	600500---S4
			S5	5	1500	114	209			SA500---S5	600500---S5
	T60	30.22×92	S3	3	900	76	209			SA622---S3	600622---S3
			S4	4	1200	95	190			SA622---S4	600622---S4
			S5	5	1500	114	209			SA622---S5	600622---S5

The torque limiter is activated when the operating torque exceeds the setting value. During the limiting phase, the device transmits reduced power in pulses. The elimination of the external cause and the reduction of the PTO speed allows the normal power transmission to be re-established. When the limiter is activated, it is recommended to disconnect the PTO to avoid unnecessary wear and overheating.

Type *:Spline manufacture is divided into two
13/8"-Z6、13/8"-Z21 For example:SA10138S1、SA10121S1

Ever-Power Industry Co.,LTD

Ratchet torque limiter Series SA

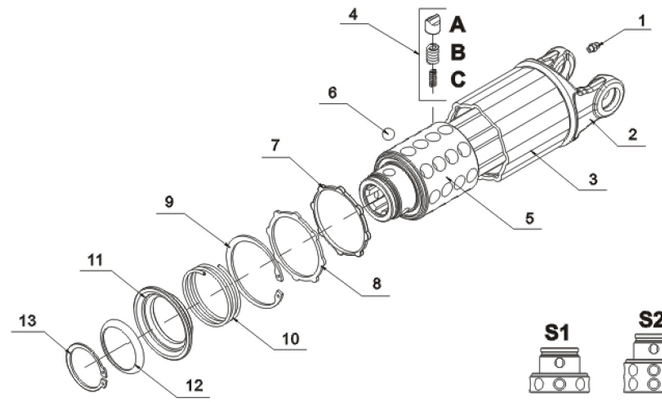

Type	Pawl kit
S1	8
S2	16
S3	24
S4	32
S5	40

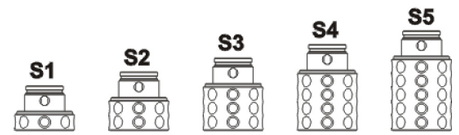

1	Greaser M6×1	
2	Yoke (type 10) S1	
	Yoke (type 20) S1 S2 S3	
	Yoke (type 30) S2 S3	
	Yoke (type 40) S2 S3 S4	
	Yoke (type 50) S3 S4 S5	
	Yoke (type 60) S3 S4 S5	
3	tube=S1 L=38	
	tube=S2 L=57	
	tube=S3 L=76	
	tube=S4 L=95	
	tube=S5 L=114	
4*	Ratchet teeth and springs set: A=Ratchet tooth B=Outer spring C=Inner spring	

5	Hub S1=1 3/8″-Z6 1 3/8″-Z21	
	Hub S2=1 3/8″-Z6 1 3/8″-Z21	
	Hub S3=1 3/8″-Z6 1 3/8″-Z21	
	Hub S4=1 3/8″-Z6 1 3/8″-Z21	
	Hub S5=1 3/8″-Z6 1 3/8″-Z21	
6	Ball 1/2″	
7	Retaining washer	
8	Grease protection	
9	Circlip	
10	Collar spring	
11	Sliding sleeve collar	
12	Snap ring	
13	Circlip	

*:Quantity in the Safety Device
Please contact S&J Technical Dept. for the exact number of ratchet teeth,outer and inner springs to be ordered.

Overrunning clutch Series RA1、RA1S

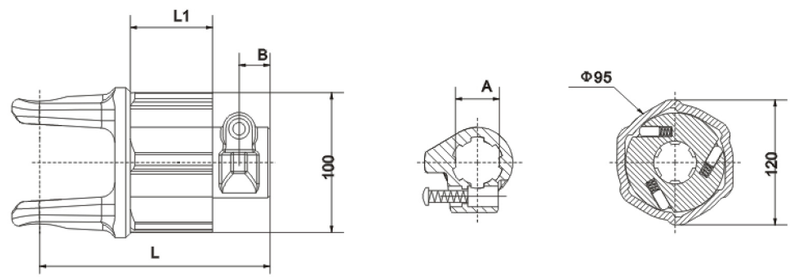

Series		Type *1	Torque Nm	L1	L	B	A	Code
T10	22×54	1RA1---	2400	43	125	21	13/8″-Z6 13/8″-Z21	6001RA1---
T20	23.8×61	2RA1---		48	130			6002RA1---
T30	27×70	3RA1---		50	132			6003RA1---
T40	27×74.6	4RA1---		56	138			6004RA1---
T50	30.22×80	5RA1---		59	141			6005RA1---
T60	30.22×92	6RA1---		66	148			6006RA1---
T7N	35×94	7NRA1---		66	149			6007NRA1---

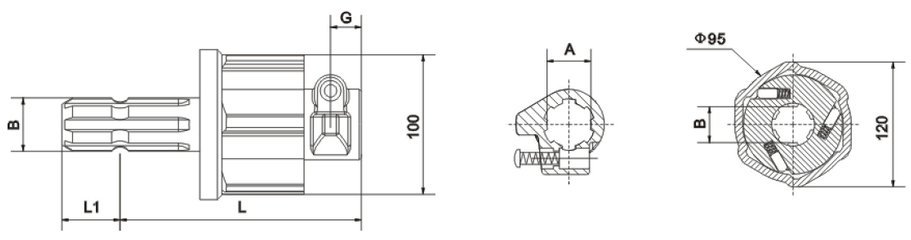

Type *2	Torque Nm	L1	L	G	A	B	Code
RA1S	2400	38	125	21	13/8″-Z6	13/8″-Z6	---RA1S---
					13/8″-Z21	13/8″-Z21	

NOTE: available upon request for anti-clockwise direction of rotation.
The device is used to transmit the motion in a single rotation direction, when the tractor drives the implement. During the stopping phase, with the tractor PTO disengaged and the implement still moving, the transmission is disconnected. This device is useful for operating machinery with high rotation inertia because during the stopping phase, the tractor PTO is dis-engaged from the driven machine.

Type *1:Spline manufacture is divided into two
13/8"-Z6?13/8"-Z21 For example:1RA1138?1RA1121
Type *2:Spline manufacture is divided into two
13/8"-Z6?13/8"-Z21 For example:138RAS1138?121RAS1121

Overrunning clutch SERIES RA1、RA1S

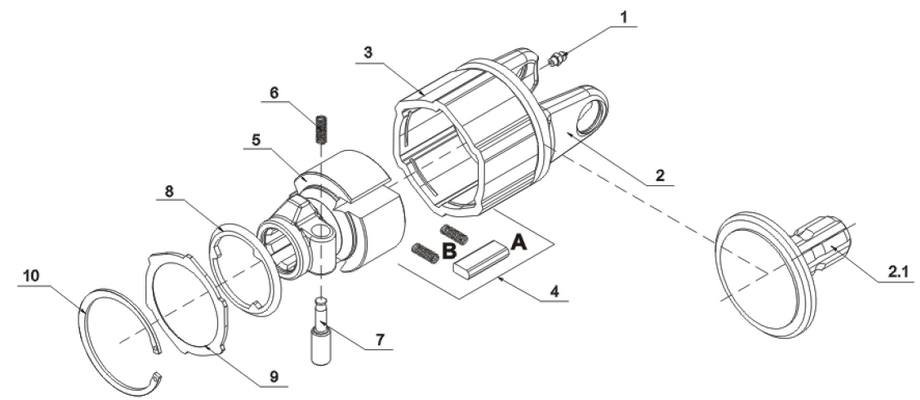

1	Greaser M6×1	
2	Yoke (type 10)	
	Yoke (type 20)	
	Yoke (type 30)	
	Yoke (type 40)	
	Yoke (type 50)	
	Yoke (type 60)	
	Yoke (type 7N)	
3	tube=56	
4	A=Ratchet	
	B=spring	
5	Hub=1 3/8″-Z6 1 3/8″-Z21	
6	Spring	
7	Pins	
8	Retaining washer	
9	Grease protection	
10	Circlip	
2.1	Hub=1 3/8″-Z6 1 3/8″-Z21	

Overrunning clutch Series RA2、RA2S

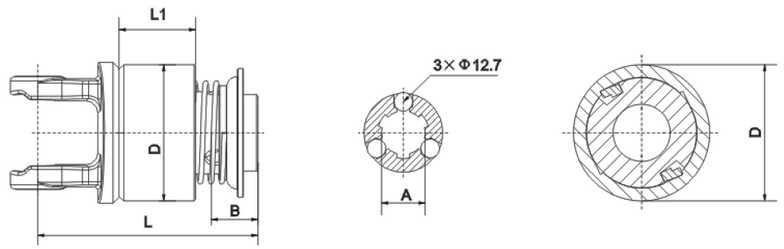

Series	Type		L1	L	D	B	A	Torque Nm	Code
T10	1RA2---	22×54	54	149	90	20	13/8″-Z6 13/8″-Z21	3000	6001RA2138
									6001RA2121
T20	2RA2---	23.8×61	54	149					6002RA2138
									6002RA2121
T30	3RA2---	27×70	54	167					6003RA2138
									6003RA2121
T40	4RA2---	27×74.6	54	167					6004RA2138
									6004RA2121
T50	5RA2---	30.22×80	54	157					6005RA2138
									6005RA2121
T60	6RA2---	30.22×92	54	167					6006RA2138
									6006RA2121
T7N	7NRA2---	35×94	54	167					6007NRA2138
									6007NRA2121

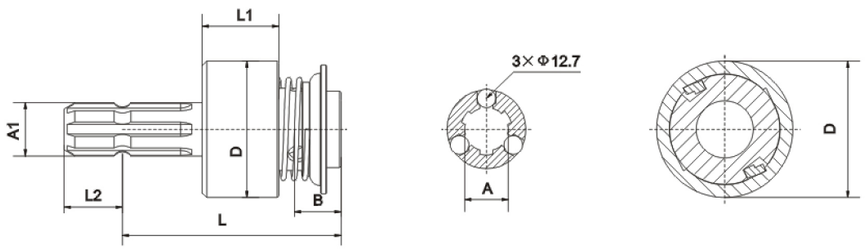

Type	Torque Nm	L1	L2	L	A1	A	B	D	Code
RA2S	3800	54	38	155	13/8″-Z6 13/8″-Z21		20	90	-
									-

NOTE: available upon request for anti-clockwise direction of rotation.
The device is used to transmit the motion in a single rotation direction, when the tractor drives the implement. During the stopping phase, with the tractor PTO disengaged and the implement still moving, the transmission is disconnected. This device is useful for operating machinery with high rotation inertia because during the stopping phase, the tractor PTO is dis-engaged from the driven machine.

Overrunning clutch Series RA2、RA2S

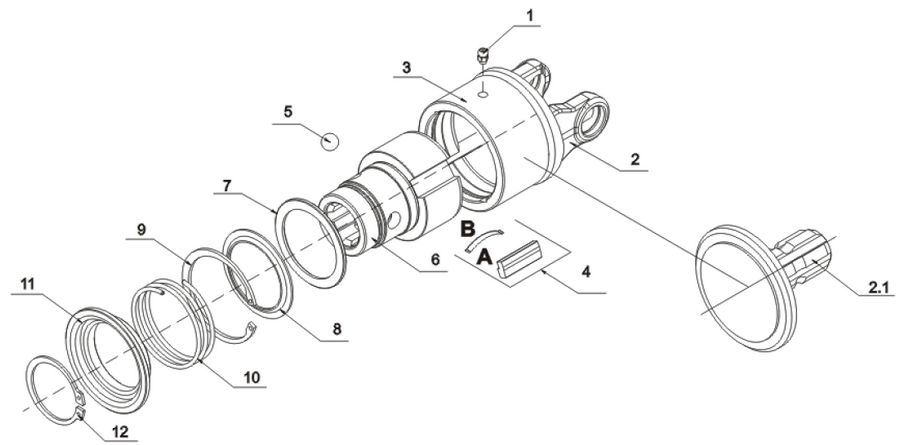

1	Greaser M6×1	
2	Yoke (type 10)	
	Yoke (type 20)	
	Yoke (type 30)	
	Yoke (type 40)	
	Yoke (type 50)	
	Yoke (type 60)	
	Yoke (type 7N)	
3	Tube=54	
4	A=Ratchet	
	B=Leaf spring	
5	Ball 1/2″	
6	Hub=1 3/8″-Z6 1 3/8″-Z21	
7	Retaining washer ring	
8	Spring push ring	
9	Circlip	
10	Collar spring	
11	Sliding sleeve collar	
12	Circlip	
2.1	Hub=1 3/8″-Z6 1 3/8″-Z21	

Friction torque limiter Series FFV1-FFV2

F1

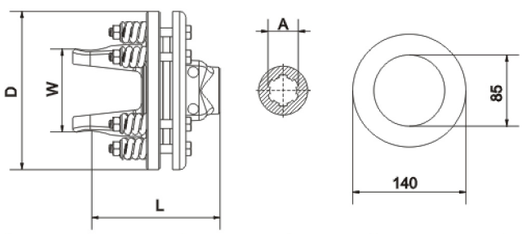

F2

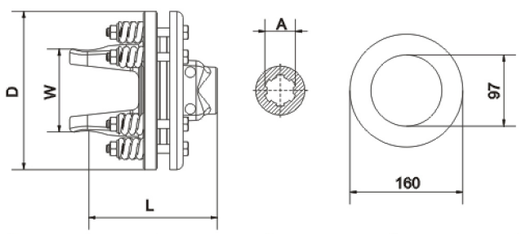

Series W-S	Series T-G		F1-F2	A	L	D	W	Torque Nm max.	Type	Code
W210		27×74.6	F1	13/8″-Z6	143	180	90	900	FFV1W210138	701W210138
W2400 (035)		32×76	F2	13/8″-Z6	143	200	90	1200	FFV2W035138	702W035138
				13/8″-Z21					FFV2W035121	702W035121
				13/4″-Z6	149				FFV2W035134	702W035134
				13/4″-Z20					FFV2W035120	702W035120
	T40	27×74.6	F1	13/8″-Z6	155	180	83	900	FFV1421138	701421138
				13/8″-Z21					FFV1421121	701421121
			F2	13/8″-Z6	154	200		1200	FFV2421138	702421138
				13/8″-Z21					FFV2421121	702421121
	T50	30.22×80	F1	13/8″-Z6	153	180	95	900	FFV1500138	701500138
				13/8″-Z21					FFV1500121	701500121
			F2	13/8″-Z6		200		1200	FFV2500138	702500138
				13/8″-Z21					FFV2500121	702500121
	T60	30.22×92	F1	13/8″-Z6	162	180	101	900	FFV1622138	701622138
				13/8″-Z21					FFV1622121	701622121
			F2	13/8″-Z6	161	200		1200	FFV2622138	702622138
				13/8″-Z21					FFV2622121	702622121
				13/4″-Z6					FFV2622134	702622134
				13/4″-Z20					FFV2622120	702622120
	T7N	35×94	F2	13/8″-Z6	158	200	105	1200	FFV27N138	7027N138
				13/8″-Z21					FFV27N121	7027N121
				13/4″-Z6					FFV27N134	7027N134
				13/4″-Z20					FFV27N120	7027N120
	T80	34.9×106.3	F2	13/8″-Z6	168	200	125	1200	FFV2824138	702824138
				13/8″-Z21					FFV2824121	702824121
				13/4″-Z6					FFV2824134	702824134
				13/4″-Z20					FFV2824120	702824120

The torque limiter is activated when the setting torque exceeds the calibration torque. During the torque peak limiting phase, the clutch continues to transmit power. The clutch is useful as a safety device to protect against load peaks and to start machines with high rotational inertia. It is recommended to ensure that the setting value is correct to avoid excessive heating of the friction discs (insufficient setting) or clutch seizing (excessive setting).

Friction clutches may become hot during use.
Do not touch!
Keep the area around the friction clutch clear of any material which could catch fire and avoid prolonged slipping.

Friction torque limiter Series FFV1-FFV2

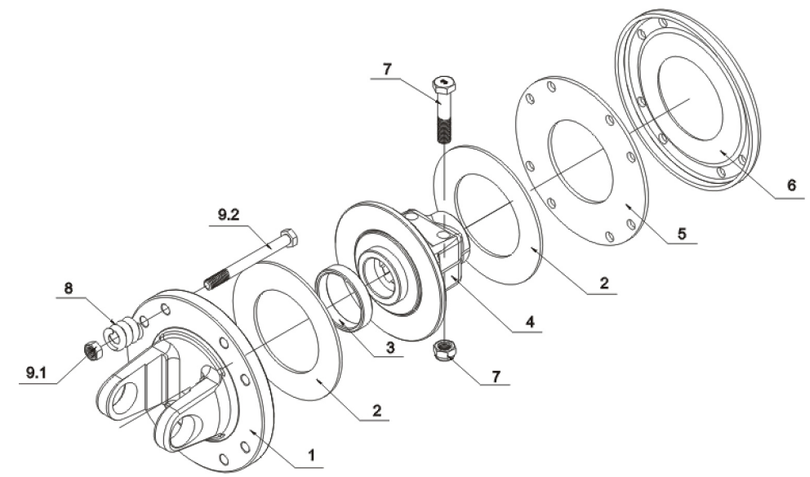

1	Flanged yoke	
2	(F1)Lining rings Φ140×Φ85 (F2)Lining rings Φ160×Φ97	
3	Bush	
4	Hub=1 3/8″-Z6 1 3/8″-Z21	
5	Inner plate	
6	Pressure plate	
7	Bolt M12×1, 25×65 + nut 8.8	
8	Spring	
9	Bolt M10×1, 5×85 + nut	

TORQUE SPECIFICATIONS

Spring L	F1			F2		
	Φ5	Φ6	Φ7	Φ5	Φ6	Φ7
	Nm	Nm	Nm	Nm	Nm	Nm
L=28.5	240	390	640	280	470	770
L=28	320	510	850	360	610	1010
L=27.5	380	640	1070	440	740	1220
L=27	460	750	1230	520	860	1400
L=26.5	520	850	1360	590	980	1570
L=26	580	930	-	650	1070	-
L=25.5	620	-	-	700	-	-

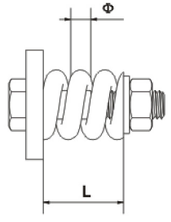

Friction torque limiter Series FFV3-FFV4

F3

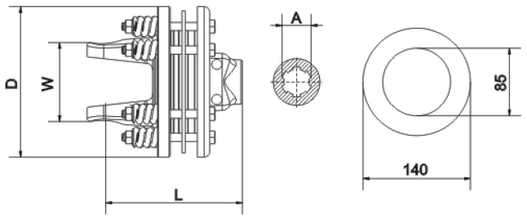

F4

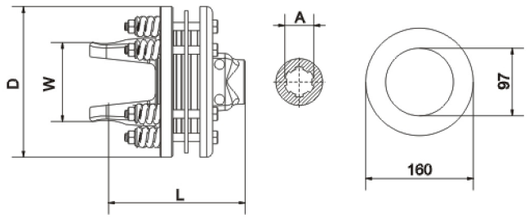

Series W-S	Series T-G		F3-F4	A	L	D	W	Torque Nm max.	Type	Code
W2400 (035)		32×76	F4	13/8″-Z6	161	200	90	1450	FFV4W035138	704W035138
				13/8″-Z21					FFV4W035121	704W035121
				13/4″-Z6	167				FFV4W035134	704W035134
				13/4″-Z20					FFV4W035120	704W035120
W2500 (036)		36×89		13/8″-Z6	167	200	103	1700	FFV4W036138	704W036138
				13/8″-Z21					FFV4W036121	704W036121
				13/4″-Z6	173				FFV4W036134	704W036134
				13/4″-Z20					FFV4W036120	704W036120
W2600 (026)		42×104		13/8″-Z6	196	200	122	2000	FFV4W026138	704W026138
				13/8″-Z21					FFV4W026121	704W026121
				13/4″-Z6	202				FFV4W026134	704W026134
				13/4″-Z20					FFV4W026120	704W026120
	T50-G50	30.22×80	F3	13/8″-Z6	170	180	95	2000	FFV3500138	703500138
				13/8″-Z21					FFV3500121	703500121
			F4	13/8″-Z6		200		2000	FFV4500138	704500138
				13/8″-Z21					FFV4500121	704500121
				13/4″-Z6					FFV4500134	704500134
				13/4″-Z20					FFV4500120	704500120
	T60-G60	30.22×92	F3	13/8″-Z6	178	180	101	2000	FFV3622138	703622138
				13/8″-Z21					FFV3622121	703622121
			F4	13/8″-Z6		200		2000	FFV4622138	704622138
				13/8″-Z21					FFV4622121	704622121
				13/4″-Z6					FFV4622134	704622134
				13/4″-Z20					FFV4622120	704622120
	T7N	35×94	F4	13/8″-Z6	175	200	105	2500	FFV47N138	7047N138
				13/8″-Z21					FFV47N121	7047N121
				13/4″-Z6					FFV47N134	7047N134
				13/4″-Z20					FFV47N120	7047N120
	T80	34.9×106.3	F4	13/8″-Z6	186	200	125	2000	FFV4824138	704824138
				13/8″-Z21					FFV4824121	704824121
				13/4″-Z6					FFV4824134	704824134
				13/4″-Z20					FFV4824120	704824120

The torque limiter is activated when the setting torque exceeds the calibration torque. During the torque peak limiting phase, the clutch continues to transmit power. The clutch is useful as a safety device to protect against load peaks and to start machines with high rotational inertia. It is recommended to ensure that the setting value is correct to avoid excessive heating of the friction discs (insufficient setting) or clutch seizing (excessive setting).

Friction clutches may become hot during use.
Do not touch!
Keep the area around the friction clutch clear of any material which could catch fire and avoid prolonged slipping.

Friction torque limiter Series FFV3-FFV4

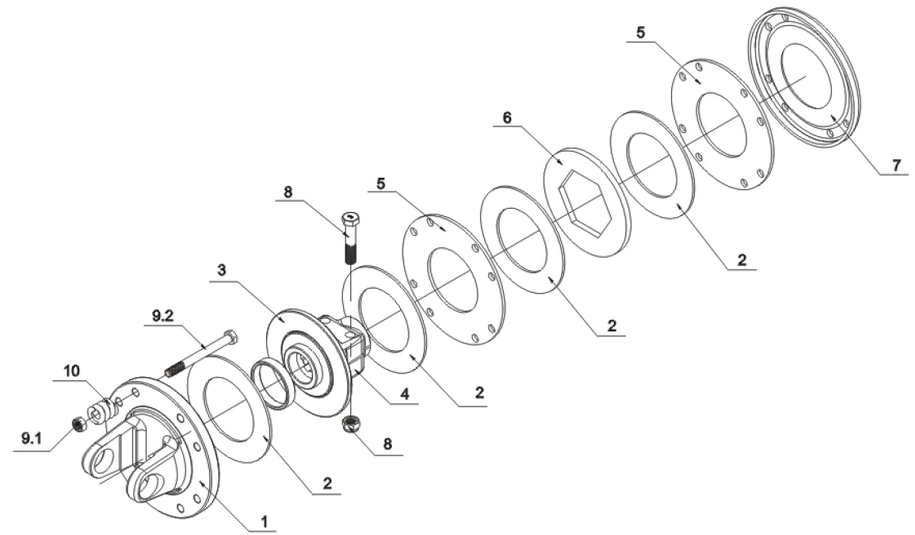

1	Flanged yoke	
2	(F3)Lining rings Φ140×Φ85 (F4)Lining rings Φ160×Φ97	
3	Bush	
4	Hub=1 3/8″-Z6 1 3/8″-Z21	
5	Inner plate	
6	Intermediate plate	
7	Pressure plate	
8	Bolt M12×1, 25×65 + nut 8.8	
9	Bolt M10×1, 5×85 + nut 8.8	
10	Spring	

TORQUE SPECIFICATIONS

Spring L	F3			F4		
	Φ5	Φ6	Φ7	Φ5	Φ6	Φ7
	Nm	Nm	Nm	Nm	Nm	Nm
L=28.5	480	780	-	560	940	1540
L=28	640	1020	-	720	1220	2000
L=27.5	760	1280	-	880	1480	2440
L=27	920	1500	-	1040	1720	2800
L=26.5	1040	1700	-	1180	1960	3140
L=26	1160	1860	-	1300	2140	-
L=25.5	1240	-	-	1400	-	-

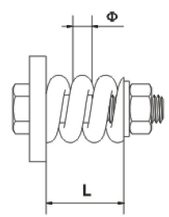

Friction torque limiter Series FFVT1-FFVT2

F1

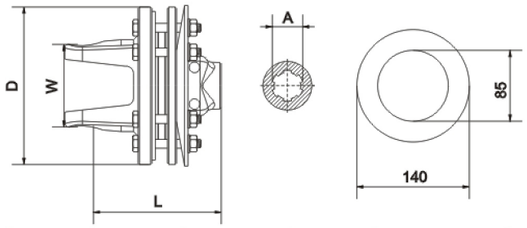

F2

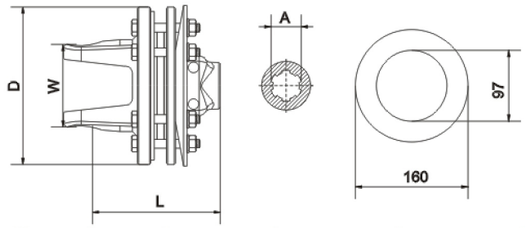

Series W-S	Series T-G		F1-F2	A	L	D	W	Torque Nm max.	Type	Code
W210		27×74.6	F1	13/8″-Z6	143	180	90	900	FFVT1W210138	70T1W210138
W2400 (035)		32×76	F2	13/8″-Z6	143	200	90	1200	FFVT2W035138	70T2W035138
				13/8″-Z21					FFVT2W035121	70T2W035121
				13/4″-Z6	149				FFVT2W035134	70T2W035134
				13/4″-Z20					FFVT2W035120	70T2W035120
	T40	27×74.6	F1	13/8″-Z6	154	180	83	1000	FFVT1421138	70T1421138
				13/8″-Z21					FFVT1421121	70T1421121
			F2	13/8″-Z6		200		1500	FFVT2421138	70T2421138
				13/8″-Z21					FFVT2421121	70T2421121
	T50	30.22×80	F1	13/8″-Z6	154	180	95	1000	FFVT1500138	70T1500138
				13/8″-Z21					FFVT1500121	70T1500121
			F2	13/8″-Z6	153	200		1500	FFVT2500138	70T2500138
				13/8″-Z21					FFVT2500121	70T2500121
	T60	30.22×92	F1	13/8″-Z6	161	180	101	1000	FFVT1622138	70T1622138
				13/8″-Z21					FFVT1622121	70T1622121
			F2	13/8″-Z6		200		1500	FFVT2622138	70T2622138
				13/8″-Z21					FFVT2622121	70T2622121
				13/4″-Z6					FFVT2622134	70T2622134
				13/4″-Z20					FFVT2622120	70T2622120
	T7N	35×94	F2	13/8″-Z6	166	200	105	1800	FFVT27N138	70T27N138
				13/8″-Z21					FFVT27N121	70T27N121
				13/4″-Z6					FFVT27N134	70T27N134
				13/4″-Z20					FFVT27N120	70T27N120
	T80	34.9×106.3	F2	13/8″-Z6	169	200	125	1800	FFVT2824138	70T2824138
				13/8″-Z21					FFVT2824121	70T2824121
				13/4″-Z6					FFVT2824134	70T2824134
				13/4″-Z20					FFVT2824120	70T2824120

The torque limiter is activated when the setting torque exceeds the calibration torque. During the torque peak limiting phase, the clutch continues to transmit power. The clutch is useful as a safety device to protect against load peaks and to start machines with high rotational inertia. It is recommended to ensure that the setting value is correct to avoid excessive heating of the friction discs (insufficient setting) or clutch seizing (excessive setting).

Friction clutches may become hot during use.
Do not touch!
Keep the area around the friction clutch clear of any material which could catch fire and avoid prolonged slipping.

Ever-Power Industry Co.,LTD

Friction torque limiter Series FFVT1-FFVT2

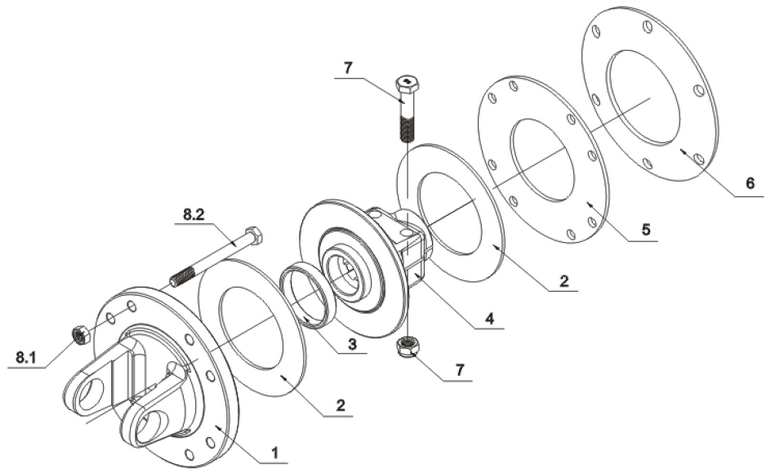

1	Flanged yoke	
2	(F1)Lining rings Φ140×Φ85 (F2)Lining rings Φ160×Φ97	
3	Bush	
4	Hub=1 3/8″-Z6 1 3/8″-Z21	
5	Inner plate	
6	Belleville spring	
7	Bolt M12×1, 25×65 + nut 8.8	
8	Bolt M10×1, 5×85 + nut 8.8	

Friction torque limiter Series FFVT3-FFVT4

F3

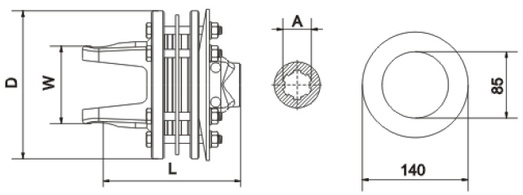

F4

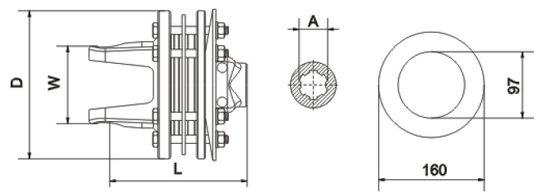

Series W-S	Series T-G		F3-F4	A	L	D	W	Torque Nm max.	Type	Code
W2400 (035)		32×76	F4	13/8″-Z6	161	200	90	1450	FFVT4W035138	70T4W035138
				13/8″-Z21					FFVT4W035121	70T4W035121
				13/4″-Z6	167				FFVT4W035134	70T4W035134
				13/4″-Z20					FFVT4W035120	70T4W035120
W2500 (036)		36×89		13/8″-Z6	167	200	103	1700	FFVT4W036138	70T4W036138
				13/8″-Z21					FFVT4W036121	70T4W036121
				13/4″-Z6	173				FFVT4W036134	70T4W036134
				13/4″-Z20					FFVT4W036120	70T4W036120
W2600 (026)		42×104		13/8″-Z6	196	200	122	2000	FFVT4W026138	70T4W026138
				13/8″-Z21					FFVT4W026121	70T4W026121
				13/4″-Z6	202				FFVT4W026134	70T4W026134
				13/4″-Z20					FFVT4W026120	70T4W026120
	T50-G50	30.22×80	F3	13/8″-Z6	167	180	95	2000	FFVT3500138	70T3500138
				13/8″-Z21					FFVT3500121	70T3500121
			F4	13/8″-Z6	168	200		2000	FFVT4500138	70T4500138
				13/8″-Z21					FFVT4500121	70T4500121
				13/4″-Z6					FFVT4500134	70T4500134
				13/4″-Z20					FFVT4500120	70T4500120
	T60-G60	30.22×92	F3	13/8″-Z6	175	180	101	2000	FFVT3622138	70T3622138
				13/8″-Z21					FFVT3622121	70T3622121
			F4	13/8″-Z6	177	200		2000	FFVT4622138	70T4622138
				13/8″-Z21					FFVT4622121	70T4622121
				13/4″-Z6					FFVT4622134	70T4622134
				13/4″-Z20					FFVT4622120	70T4622120
	T7N	35×94	F4	13/8″-Z6	181	200	105	2500	FFVT47N138	70T47N138
				13/8″-Z21					FFVT47N121	70T47N121
				13/4″-Z6					FFVT47N134	70T47N134
				13/4″-Z20					FFVT47N120	70T47N120
	T80	34.9×106.3	F4	13/8″-Z6	185	200	125	2500	FFVT4824138	70T4824138
				13/8″-Z21					FFVT4824121	70T4824121
				13/4″-Z6					FFVT4824134	70T4824134
				13/4″-Z20					FFVT4824120	70T4824120

The torque limiter is activated when the setting torque exceeds the calibration torque. During the torque peak limiting phase, the clutch continues to transmit power. The clutch is useful as a safety device to protect against load peaks and to start machines with high rotational inertia. It is recommended to ensure that the setting value is correct to avoid excessive heating of the friction discs (insufficient setting) or clutch seizing (excessive setting).

Friction clutches may become hot during use.
Do not touch!
Keep the area around the friction clutch clear of any material which could catch fire and avoid prolonged slipping.

Friction torque limiter Series FFVT3-FFVT4

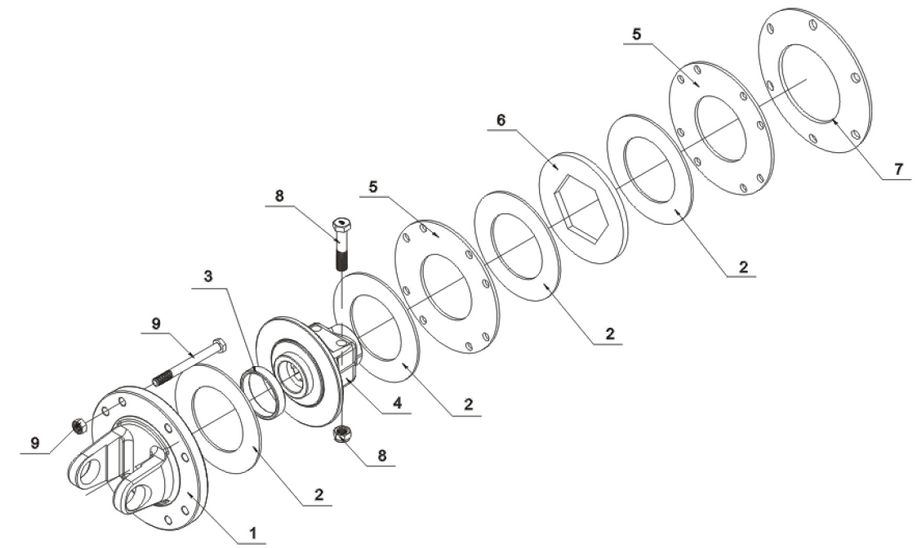

1	Flanged yoke	
2	(F3)Lining rings Φ140×Φ85 (F4)Lining rings Φ160×Φ97	
3	Bush	
4	Hub=1 3/8″-Z6 1 3/8″-Z21	
5	Inner plate	
6	Intermediate plate	
7	Belleville spring	
8	Bolt M12×1, 25×65 + nut 8.8	
9	Bolt M10×1, 5×85 + nut 8.8	

Constant velocity joint Series V

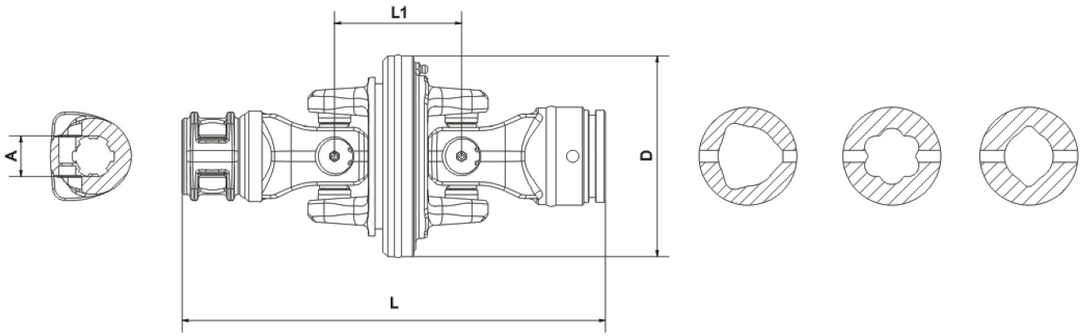

Series W-S	Series T		A	L1	L	D	Type	Code
W210		23.8×91 27×74.6	13/8″-Z6	95	287	155	VW210138	800W210138
			13/8″-Z21				VW210121	800W210121
W2400 (035)		27×94 32×76	13/8″-Z6	105	350	166	VW035138	800W035138
			13/8″-Z21				VW035121	800W035121
S2500 (036)		32×106.3 36×89	13/8″-Z6	118	348	182	VW036138	800W036138
			13/8″-Z21				VW036121	800W036121
	T40	23.8×91 27×74.6	13/8″-Z6	95	287	155	V421138	800421138
			13/8″-Z21				V421121	800421121
	T60	27×94 32×76	13/8″-Z6	105	350	166	V622138	800622138
			13/8″-Z21				V622121	800622121
	T80	32×106.3 36×89	13/8″-Z6	118	348	182	V824138	800824138
			13/8″-Z21				V824121	800824121

Constant velocity joint Series V

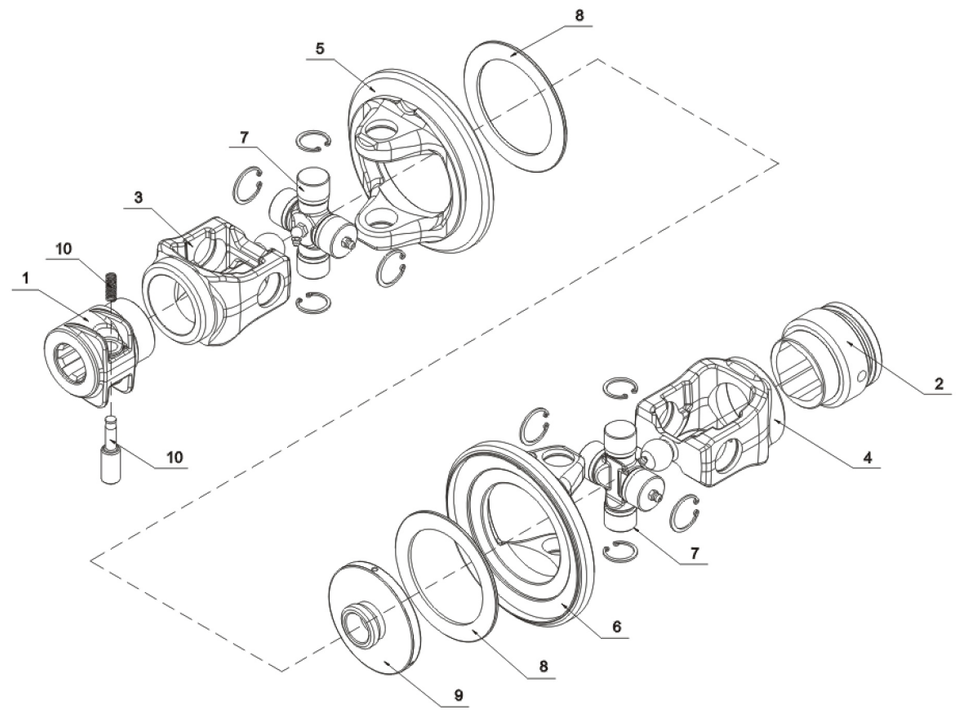

1	Hub=1 3/8″-Z6 1 3/8″-Z21	
2	female connector	
3	Yoke 1	
4	Yoke 2	
5	Flanged yoke 1	
6	Flanged yoke 2	
7	Cross journal	
8	Retaining washer ring	
9	Slider	
10	Spring+pins	

Speedlash Series SP

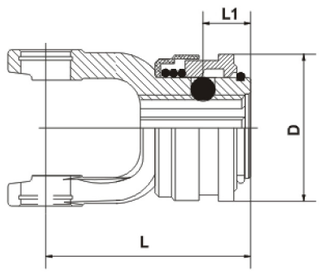

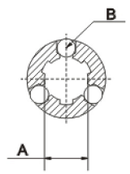

Series		Type	D	L1	L	A	B	Code
T10	22×54	SP110138	80	24	94	13/8″-Z6	SΦ12.7	900110138
		SP110121				13/8″-Z21		900110121
T20	23.8×61	SP220138			102	13/8″-Z6		900220138
		SP220121				13/8″-Z21		900220121
T30	27×70	SP311138			106	13/8″-Z6		900311138
		SP311121				13/8″-Z21		900311121
T40	27×74.6	SP421138			108	13/8″-Z6		900421138
		SP421121				13/8″-Z21		900421121
T50	30.22×80	SP500138			113	13/8″-Z6		900500138
		SP500121				13/8″-Z21		900500121
T60	30.22×92	SP622138			120	13/8″-Z6		900622138
		SP622121				13/8″-Z21		900622121
T70	30.22×106.3	SP723138			125	13/8″-Z6		900723138
		SP723121				13/8″-Z21		900723121
T7N	35×94	SP7N138			120	13/8″-Z6		9007N138
		SP7N121				13/8″-Z21		9007N121
T80	34.9×106.3	SP824138			128	13/8″-Z6		900824138
		SP824121				13/8″-Z21		900824121

Speedlash Series SP

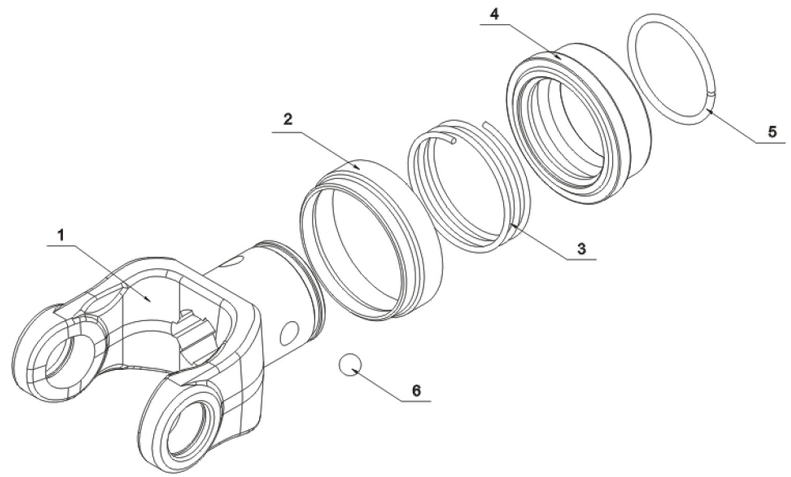

1	Yoke (type 10) 1 13/8″-Z6 Yoke (type 10) 1 13/8″-Z21	
	Yoke (type 20) 1 13/8″-Z6 Yoke (type 20) 1 13/8″-Z21	
	Yoke (type 30) 1 13/8″-Z6 Yoke (type 30) 1 13/8″-Z21	
	Yoke (type 40) 1 13/8″-Z6 Yoke (type 40) 1 13/8″-Z21	
	Yoke (type 50) 1 13/8″-Z6 Yoke (type 50) 1 13/8″-Z21	
	Yoke (type 60) 1 13/8″-Z6 Yoke (type 60) 1 13/8″-Z21	
	Yoke (type 7N) 1 13/8″-Z6 Yoke (type 7N) 1 13/8″-Z21	
	Yoke (type 80) 1 13/8″-Z6 Yoke (type 80) 1 13/8″-Z21	
2	Protection set	
3	Collar spring	
4	Sliding sleeve collar	
5	Snap ring	
6	Ball 1/2″	

Splined dimensions

1 1/8″-Z6

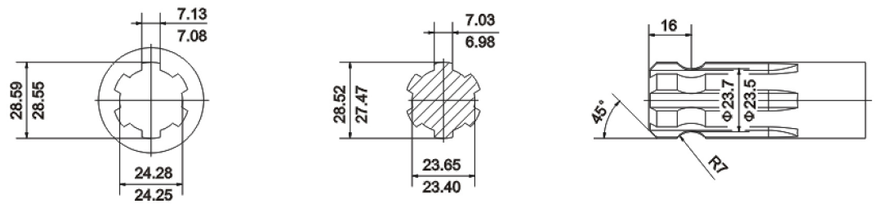

1 3/8″-Z6

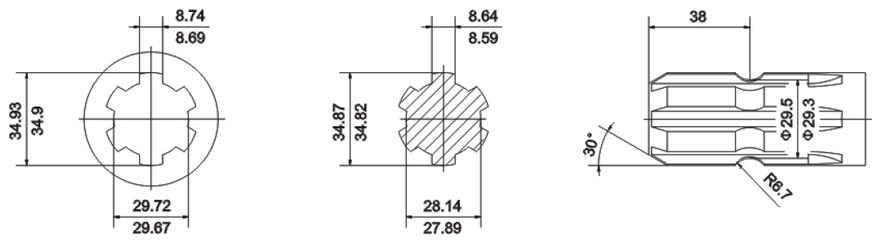

1 3/8″-Z21

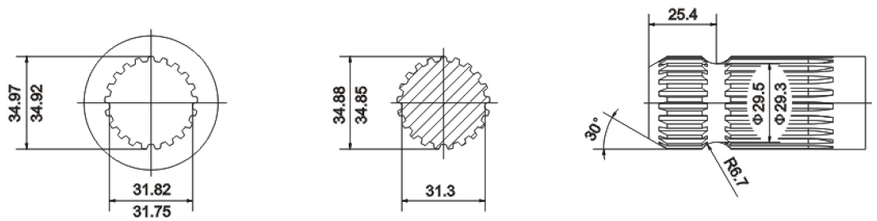

1 3/4″-Z6

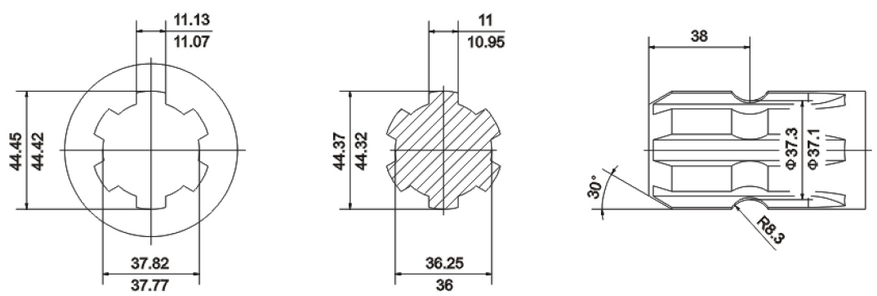

1 3/4″-Z20

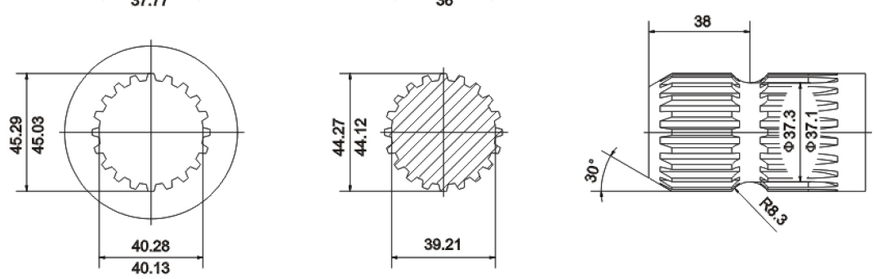

PTO adaptor & splined shaft

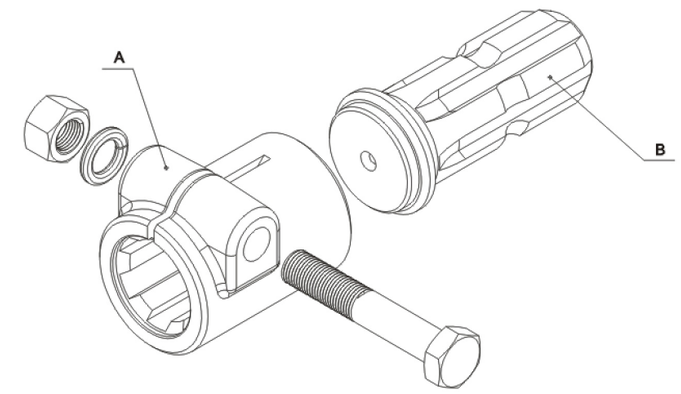

Code	A	B	Length	Code	A	B	Length
300138B118	13/8″-Z6	1 1/8″-Z6	135	300138P118	13/8″-Z6	1 1/8″-Z6	135
300138B138		1 3/8″-Z6	160	300138P138		1 3/8″-Z6	160
300138B134		1 3/4″-Z6	165	300138P134		1 3/4″-Z6	165
300138B121		1 3/8″-Z21	160	300138P121		1 3/8″-Z21	160
300138B120		1 3/4″-Z20	165	300138P120		1 3/4″-Z20	165
300134B138	13/4″-Z6	1 3/8″-Z6	160	300121P118	13/8″-Z21	1 1/8″-Z6	135
300134B121		1 3/8″-Z21	170	300121P138		1 3/8″-Z6	160
300134B120		1 3/4″-Z20	175	300121P134		1 3/4″-Z6	165
300121B118	13/8″-Z21	1 1/8″-Z6	135	300121P120		1 3/4″-Z20	
300121B138		1 3/8″-Z6	160				
300121B134		1 3/4″-Z6	165				
300121B120		1 3/4″-Z20					
300120B138	13/4″-Z20	1 3/8″-Z6	170				
300120B134		1 3/4″-Z6	175				
300120B121		1 3/8″-Z21	170				

PTO adaptor & splined shaft

L	Splined bush 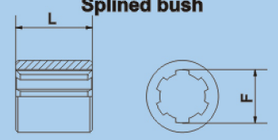					Spline joint 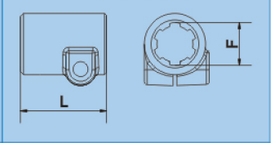
	F $1\frac{1}{8}''$-Z6	F $1\frac{3}{8}''$-Z6	F $1\frac{3}{4}''$-Z6	F $1\frac{3}{8}''$-Z21	F $1\frac{3}{4}''$-Z20	F $1\frac{3}{8}''$-Z6
60	302G118060	302G138060	302G134060	302G121060	302G120060	
65	302G118065	302G138065	302G134065	302G121065	302G120065	
80	302G118080	302G138080	302G134080	302G121080	302G120080	302G138080S
100	302G118100	302G138100	302G134100	302G121100	302G120100	
120		302G138120				
130		302G138130				

L	Splined shaft (one end) 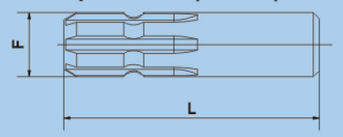				
	F $1\frac{1}{8}''$-Z6	F $1\frac{3}{8}''$-Z6	F $1\frac{3}{4}''$-Z6	F $1\frac{3}{8}''$-Z21	F $1\frac{3}{4}''$-Z20
-	301G118---	301G138---	301G134---	301G121---	301G120---

L	Splined shaft (both ends) 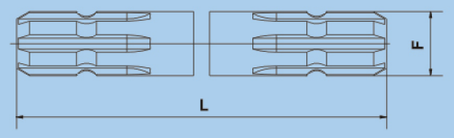				
	F $1\frac{1}{8}''$-Z6	F $1\frac{3}{8}''$-Z6	F $1\frac{3}{4}''$-Z6	F $1\frac{3}{8}''$-Z21	F $1\frac{3}{4}''$-Z20
-	301G118D---	301G138D---	301G134D---	301G121D---	301G120D---

Corss journal

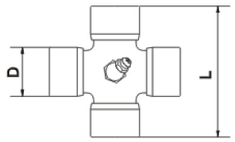

Series	Type	D	L
T10	2000110	22	54
W100	2000010	22	55
T20-W200	2000220	23.8	61
T30-W1	2000311	27	70
T40-W210-W2300S	2000421	27	74.6
W220	2000622	30.18	92
S230	2000723	30.18	106.3
T50-G50	2000500	30.22	80
T60-G60	2000600	30.22	92
T70	2000700	30.22	106.3
W2400(035)	2000035	32	76
T80-G80-S240	2000824	34.9	106.3
T7N-G70	200007N	35	94
S2500(036)	2000036	36	89
T90-G90	2000900	41	108
S2600(026)	2000026	42	104

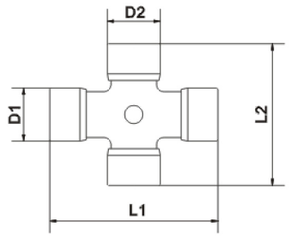

Series	Type	D1	L1	D2	L2
T40 W210	20002040	23.8	91	27	74.6
T60 W2400	20004035	27	94	32	76
T80 W2500	20003536	32	106.3	36	89

Tubes

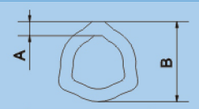

Inner			
Type	A	B	Code
T10	26.5	3.5	301T263
T20	29	3.5	301T293
T30	36	3.4	301T363
T40	36	4.5	301T364
T50	45	4	301T454
T60	45	4	301T454
T70	45	5.5	301T455
T80	54	4	301T544
T90	54	6	301T546

Outer			
Type	A	B	Code
T10	33	2.6	302T332
T20	36	3.4	301T363
T30	43	3	302T433
T40	43	3	302T433
T50	52	3	302T523
T60	54	4	302T544
T70	54	4	302T544
T80	63	4	302T634
T90	63	4	302T634

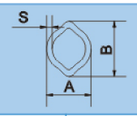

Inner				
Type	A	B	S	Code
W100	23.8	31	5	301L235
W200-W1-W210	34.5	40	4	301L344
W2300S-W220 W2400(035)	39.5	49	5	301L395

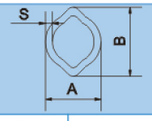

Outer				
Type	A	B	S	Code
W100	30	39	3	302L303
W200-W1-W210	41.3	48	3	302L413
W2300S-W220 W2400(035)	48	57.5	4	302L484

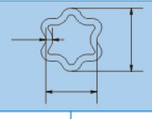

Inner				
Type	A	B	S	Code
S230-S240 S2500(036)	51	37	-	301S510
S2600(026)	61	47	4.5	301S614

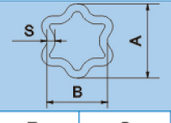

Outer				
Type	A	B	S	Code
S230-S240 S2500(036)	61	47	4.5	302S614
S2600(026)	71	57.5	5	302S715

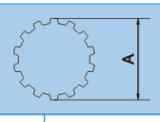

Type	A	L	Code
G50-G60	35-Z12	-	301G35Z12--
G70-G80	40-Z14	-	301G40Z14--
G90	45-Z16	-	301G45Z16--

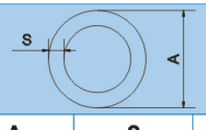

Type	A	S	Code
G50-G60	55	3	300C553
G70-G80	61	3.5	300C613
G90	69	5	300C695

Plastic shield

PS001

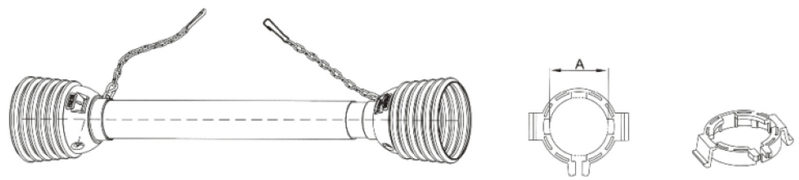

PS002

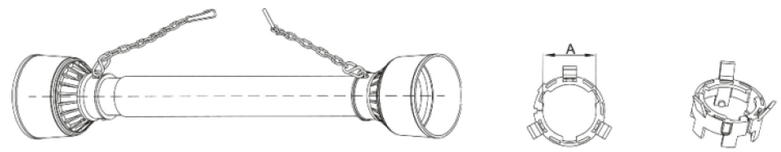

Series	Shield tube diameter		Retaining collar(A)	
	Outer	Inner	Outer	Inner
10	61	55.6	40	34
20			46	40
30-40	66.5	61	54	47
50	81.2	75	62.5	54.5
60-70			69	60
80-90	96	89.9	81.5	69.5

PS003

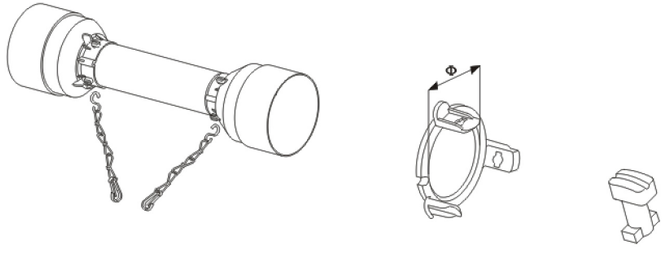

Series	Shield tube diameter		Retaining collar(Φ)	
	Outer	Inner	Outer	Inner
10	61	55.6	40	34
20			46	40
30-40	66.5	61	54	47
50	81.2	75	62.5	54.5
60-70			69	60
80-90	96	89.9	81.5	69.5

Safety and working conditions

Newland Has always considered safety to be one of the most important design and construction parameters for its products which are all built in full compliance with the international ISO standard and EU safety regulations. Information on safety and on correct final user’s application of the PTO drive shaft are supplied in safety labels and in the “Use and Maintenance” Manual provided with all PTO drive shafts. It is the customer responsibility to inform S&J. about the Country to which the PTO drive shafts will be delivered, in order to provide them with the suitable Manuals and Labels.

EQUIPPED WITH:

Safety labels
Instruction handbook
Anti-rotation chains

Label on outer protective tube

Label on outer steel tube

“Use and Maintenance” handbook

Safety and working conditions

Please read carefully before use “Use and Maintenance” handbook。
Before starting to work, make sure that:

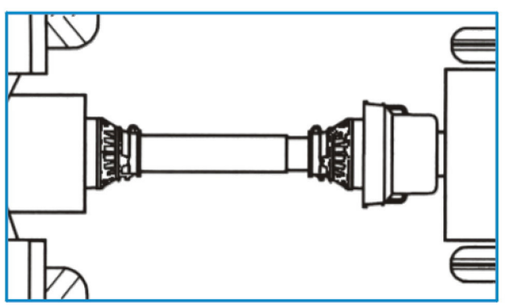

- Ensure that all driveline,tractor and implement shields are functional and in place before operation . Damaged or missing parts must be replaced with original spare parts, correctly installed, before using the driveline.

- Ensure that the driveline is securely attached to the tractor.

- the drive shaft does not exceed the speed and power conditions defined in the machine’s operating handbook. Any safety device must be engaged on the machine side. All rotating parts must be protected.

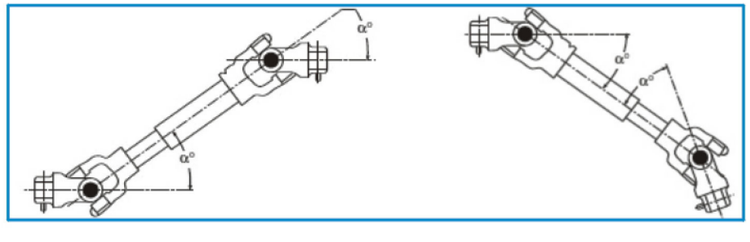

- Working angle not allowed

Safety and working conditions

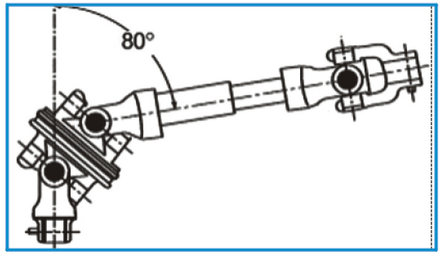

- the PTO drive shaft joint does not operate continuously with an angle close to 80°, but only for brief periods (steering).

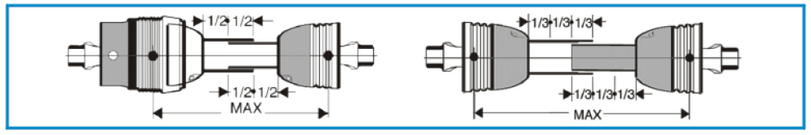

- Do not exceed the maximum elongation conditions while working.

- DANGER! Rotating driveline-contact can cause death. Keep away!
  Do not wear loose clothing, jewelry,
  or hair that could become entangled with the driveline.

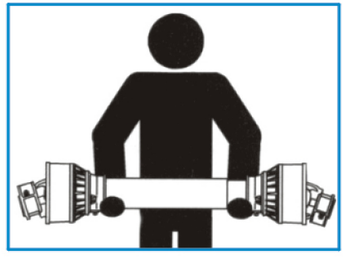

- The transmission must be transported horizontally to prevent accidents (since it may slip out) or to avoid damage to safety guards. Depending on the weight, use a suitable means of transport.

safety and working conditions

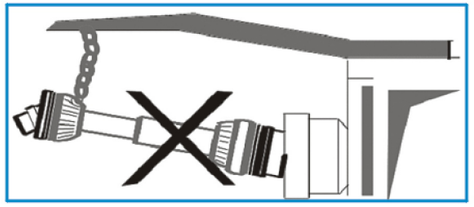

- Never use the safety chains to support the driveline for storage.
  Always use the support on the implement.

- Do not stand on the driveline. Do not step over, or go under the driveline.

- Disengage the P.T.O, turn off the tractor engine and remove key before approaching the implement or performing maintenance work.

- Friction clutches may become hot dring use .Do not touch !
  Keep the area around the friction clutch clear of any material which could catch fire and avoid prolonged slipping.

Gear box

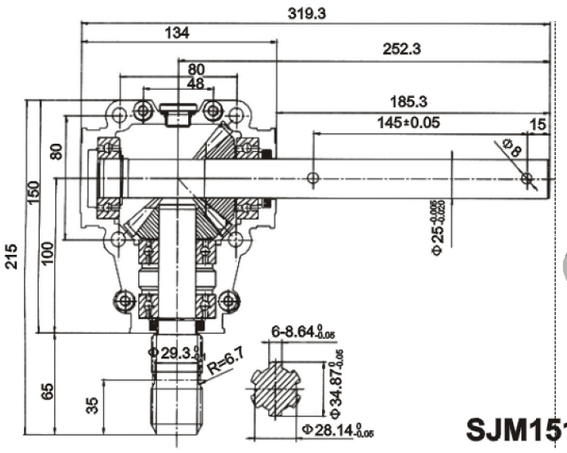

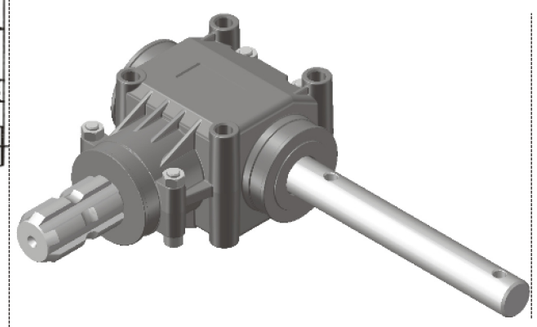

SJM1515-1

Item No		SJM1515-1
Ratio		1:1
Module		4.5
Input Description		Spline shaft
Output Description		Plain shaft
Housing Material		YL104
Gear Material		20CrMnTi
Shaft Material		40Cr
Housing Surface Colour		According to the customers' requirements
N.W	kg	4.18
Rated input power	HP	11
	KW	8
Rated output torque	N.m	14
Rated input speed	rpm	540

Ever-Power Industry Co.,LTD

Gear box

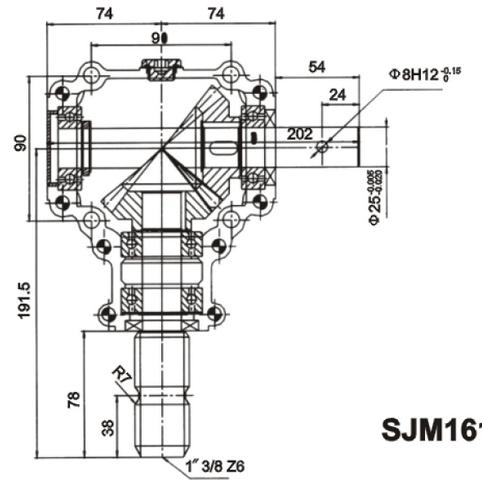

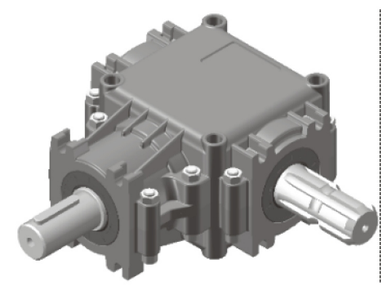

SJM1616-2

Item No		SJM1616-2
Ratio		1:1
Module		4.5
Input Description		Spline shaft
Output Description		Plain shaft
Housing Material		YL104
Gear Material		20CrMnTi
Shaft Material		40Cr/45
Housing Surface Colour		Black plastic spray
N.W	kg	4.63
Rated input power	HP	15
	KW	11
Rated output torque	N.m	18.9
Rated input speed	rpm	540

Gear box

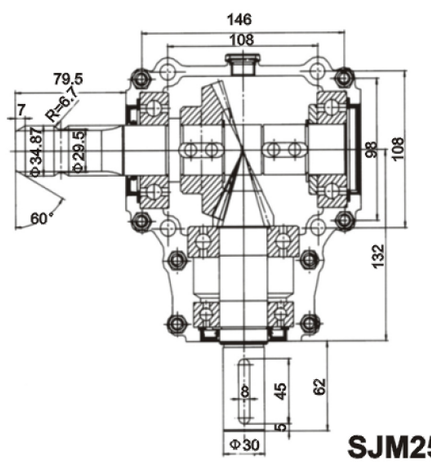

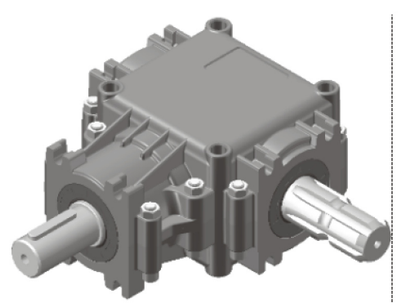

SJM2509-2F.W

Item No		SJM2509-2F.W
Ratio		1:2.78
Module		3.8
Input Description		Spline shaft
Output Description		Plain shaft
Housing Material		YL104
Gear Material		20CrMnTi
Shaft Material		40Cr/20CrMnTi
Housing Surface Colour		True colors
N.W	kg	7.36
Rated input power	HP	14
	KW	10
Rated output torque	N.m	4.9
Rated input speed	rpm	540

Gear box

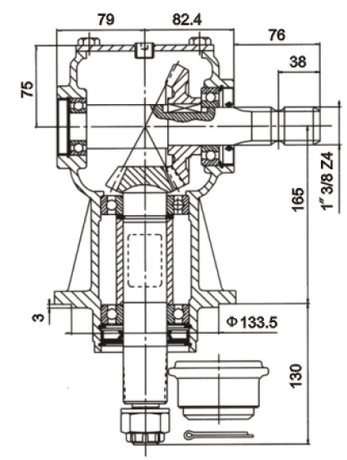

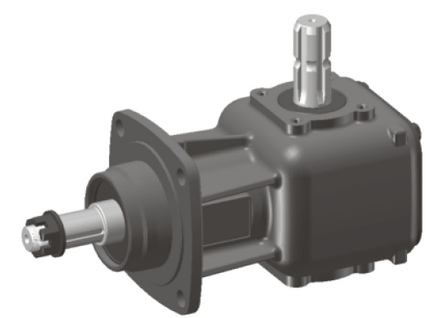

SJM2312-1

Item No		SJM2312-1
Ratio		1:1.92
Module		5
Input Description		Spline shaft
Output Description		Cone base aequilate spline shaft
Housing Material		QT400-18
Gear Material		20CrMnTi
Shaft Material		20CrMnTi
Housing Surface Colour		According to the customers' requirements
N.W	kg	16
Rated input power	HP	30
	KW	22
Rated output torque	N.m	20
Rated input speed	rpm	540